M-61-64-1-VI • JANUARY 1966

BIOLOGICAL MEASUREMENT OF MAN IN SPACE

FINAL REPORT
VOLUME VI

TIME LINE AND FEASIBILITY ANALYSIS FOR AAP BIOMEDICAL EXPERIMENT PROGRAM

Prepared for
NATIONAL
AERONAUTICS AND
SPACE
ADMINISTRATION

BIOLABS

LOCKHEED MISSILES & SPACE COMPANY
A GROUP DIVISION OF LOCKHEED AIRCRAFT CORPORATION
SUNNYVALE, CALIFORNIA

M-61-64-1-VI • JANUARY 1966

BIOLOGICAL MEASUREMENT OF MAN IN SPACE

FINAL REPORT
VOLUME VI

TIME LINE AND FEASIBILITY ANALYSIS FOR AAP BIOMEDICAL EXPERIMENT PROGRAM

Prepared for
NATIONAL AERONAUTICS AND SPACE ADMINISTRATION
Contract No. NASw-1071

H. T. Fisher - Study Leader
W. M. Helvey - Manager, Biotechnology

BIOLABS

LOCKHEED MISSILES & SPACE COMPANY
A GROUP DIVISION OF LOCKHEED AIRCRAFT CORPORATION
SUNNYVALE, CALIFORNIA

NOTICE

The information and design disclosed herein were originated by and are the property of Lockheed Aircraft Corporation. Lockheed reserves all patent, proprietary, design, manufacturing, reproduction, use, and sales rights thereto, and to any article disclosed herein, except to the extent rights are expressly granted to others. The foregoing does not apply to vendor proprietary parts.

FOREWORD

Lockheed Missiles & Space Company (LMSC) is submitting this document in compliance with the requirements of NASA Contract NASw-1071 (Biolabs), Modification 3, dated 1 Oct 1965,* from the National Aeronautics and Space Administration (NASA).

This volume describes the technical approach, analysis, and mockup design effort involved in determining (1) preliminary estimates of time requirements for conducting NASA-specified biomedical and behavioral experiments for the Apollo Applications Program (AAP) and (2) the feasibility of performing these experiments in a modified AAP LEM ascent stage (LEM Laboratory). The volume is supplemented by an Appendix containing detailed procedures for these experiments.

To maintain a continuity of relationship with prior phases of the Biolabs Study conducted by LMSC, this volume has been designated the sixth in the series of documents reporting study progress and results.** The previous volumes are as follows:

Volume	Title
	Summary
I	Biomedical and Human-Performance Program
II	Conceptual Design of a Measurement System for Apollo X
III	Conceptual Design of a Measurement System for Apollo Extension Systems
IV	Conceptual Design of a Measurement System for a Manned Orbital Research Laboratory
V	Preliminary Requirements Data Book

*National Aeronautics and Space Administration, Study of Conceptual Design and Optimization of Measurement Devices for Biomedical and Human Factors Testing for Orbital Research Laboratory Concepts, NASA Contract NASw-1071, Washington, D.C.
**Lockheed Missiles & Space Company, Biomedical Measurement of Man in Space, Final Report, Vols. I through VI, M-61-64-1, Sunnyvale, Calif., 1964-65 (Various Dates)

ACKNOWLEDGEMENTS

This report was prepared by a special team comprising members of the LMSC Biotechnology organization under the direction of J. Kraft, Ed.D., Assistant Manager, Biotechnology. Personnel from Beckman Instruments, Inc. and Spacelabs, Inc., performed a major subcontractor role in the execution of this study. Able assistance was also provided by other departments of LMSC and consultant personnel.

Appropriate and timely guidance was provided to the study by Dr. E. J. McLaughlin, contract monitor for the NASA Office of Manned Space Flight, Washington, D.C.

A group of medical and research consultants gave generously of their ideas and time to assist in the Study, and their services are deeply appreciated.

The LMSC AAP effort was under the study leadership of Mr. H. T. Fisher, assisted by a team of principal contributors, as follows:

Organization	Contributor	Position
LMSC	K. L. Contor	Project Engineer and Time-Line Analyst
	V. M. Downey, M.D.	Medical Analyst and Consultant
	J. M. Lagerwerff, M.D.	Medical Analyst and Consultant
	G. A. Albright, M.D.	Medical Analyst and Consultant
	H. L. Parris, Ph.D.	Program Consultant
	F. E. Riley	Design Engineer
	J. W. Allquist (Medical Student)	Medical Analyst
	C. J. Cornell (Medical Student)	Medical Analyst

Organization	Contributor	Position
LMSC	L. H. Goldich	Publications Engineer, Specialist
Beckman Instruments, Inc.	A. Schoen	Consultant Study Leader
	Miss P. Kenney	Biotechnologist
Spacelabs, Inc.	E. L. Jackson	Consultant Study Leader
Stanford University School of Medicine (Respiratory Function Laboratory)	A. Van Kessel	Physiology Consultant
Stanford University Children's Hospital (Bio-Chemical Laboratory)	V. Heinrick	Microscopy/Chemistry Consultant
Selvey Bio Laboratory	W. K. Selvey	Microscopy/Chemistry Consultant
U.S. Naval School of Aviation Medicine	E. F. Miller, II, Ph. D.	Experiment Consultant

SUMMARY AND CONCLUSIONS

SUMMARY AND CONCLUSIONS

This study is an outgrowth and an extension of the Biolabs Program contract with the National Aeronautics and Space Administration (NASA). A semihard mockup of a modified LEM AAP ascent stage (LEM Laboratory) was designed and constructed. Detailed preliminary experiment procedures were prepared for the NASA-specified biomedical and behavioral experiments (0100 through 0121 and 0201 through 0203, respectively). The experiments were conducted in the LEM Laboratory mockup, using functional and mockup equipment. Each experiment was conducted three times by trained, untrained, and untrained pressure-suited personnel. Experiment times were identified for the conduct of both individual and integrated experiments (two or more experiments combined). The feasibility of conducting the experiments in the LEM Laboratory mockup was also determined. A preliminary ordering of experiments was prepared, and a typical and representative 45-day crew work/rest cycle was developed, employing the majority of biomedical and behavioral experiments. Experiment equipment, recommended for conduct of the experiments, was discussed in detail and equipment characteristics data specified. Finally, a brief summary of a recommended future Biolabs study relative to the development of the biomedical and behavioral experiment equipment package was prepared.

Conclusions were drawn on the basis of careful analysis and evaluation of the test results, subject to the following limitations:

- The time-line testing and feasibility analysis were conducted under 1-g conditions.
- Each individual or integrated experiment was conducted three times.
- Mockup equipment, as opposed to functional, was used in several instances.
- Experiment procedures were based on present biomedical and behavioral experiments which are not sufficiently well defined.

Major conclusions reached in this study are as follows:

(1) The technique of time-line testing and feasibility analysis proved to be a highly effective tool (despite the previously mentioned limitations) in determining times required and the feasibility of conducting the biomedical and behavioral experiments.

(2) Various experiments should be combined (integrated) because of commonality of procedures, equipment, and measurement parameters.

(3) The conduct of many individual experiments requires too much time, and they should therefore be eliminated or combined with other related longer-duration experiments.

(4) Untrained and trained experimenters made approximately the same number of "human errors." However, the types of errors made by untrained experimenters, compared to those made by trained experimenters, resulted in (1) less reliable data, and (2) variation in results obtained upon experiment repetition.

(5) Preservation of certain samples could result in a time-saving relative to the biochemical experiments.

(6) The use of a pressure suit in a vented mode with visor up and gloves off does not appreciably affect experiment conduct time, although several experiments (primarily physiology) cannot be performed in a pressure suit.

(7) The LEM Laboratory cabin configuration presents a variety of constraints due to limited volume and related insufficient usable crew space.

(8) Experiment procedures require further refinement in order to provide more reliable application results.

(9) Trained experimenter personnel tend to fabricate (mentally) and perform procedural steps which are missing or incomplete.

(10) The experiment station configurations, as presented, require additional human engineering to improve layout, display/control arrangements, functional arrangement of equipment, and compartment design.

CONTENTS

CONTENTS

Section		Page
	FOREWORD	iii
	ACKNOWLEDGMENTS	iv
	SUMMARY AND CONCLUSIONS	vii
	ILLUSTRATIONS	xiii
	TABLES	xviii
1	INTRODUCTION	1-1
	1.1 Purpose of Study	1-1
	1.2 Scope of Study	1-1
	1.3 Study Results	1-2
	1.4 Experiment Time-Line Testing and Feasibility Analysis	1-3
	1.5 ORL Missions and Flight Schedule Requirements	1-6
	1.6 Experiment Synopsis	1-7
	1.7 Flight Payload Specification	1-7
	1.8 Equipment Development	1-8
	1.9 Report Organization	1-8
2	AAP VEHICLE CONFIGURATION AND MISSION AND FLIGHT SCHEDULE REQUIREMENTS	2-1
	2.1 Background	2-1
	2.2 Launch Vehicle and Mission Characteristics	2-1
	2.3 Basic Spacecraft Configuration	2-3
	2.4 AAP Flight Configurations	2-4
	2.5 LEM Ascent Stage (Minimum Modification)	2-12
	2.6 Extended Mission LEM Laboratory	2-14
	2.7 Space Allocation Study	2-14
	2.8 AAP Missions and Flight Characteristics	2-18

Section		Page
3	BIOMEDICAL AND BEHAVIORAL EXPERIMENT SYNOPSIS	3-1
	3.1 Biomedical and Behavioral Experiments	3-1
	3.2 Biomedical Experiments (0100 Through 0121)	3-1
	3.3 Behavioral Experiments (0201 Through 0203)	3-15
4	PROGRAM TECHNICAL APPROACH	4-1
	4.1 General Considerations	4-1
	4.2 Summary of Technical Tasks	4-3
	4.3 Procedure Development for Biomedical and Behavioral Experiments	4-4
	4.4 Development of AAP LEM Laboratory Mockup	4-7
	4.5 Preparation for the Time-Line Testing and Feasibility Analyses	4-11
	4.6 Methodology of Time-Line Testing and Feasibility Analyses	4-16
5	TIME-LINE TEST AND FEASIBILITY ANALYSIS RESULTS	5-1
	5.1 General Considerations	5-1
	5.2 Time-Line Testing	5-1
	5.3 Feasibility Analysis	5-2
	5.4 Test Scheduling	5-3
	5.5 Experimenter Capability and Training	5-3
	5.6 Typical Problem Areas – Time-Line Testing and Feasibility Analysis	5-5
	5.7 Time-Line Testing and Feasibility Analysis Results	5-9
	5.8 Summary of Time-Line Test and Feasibility Analysis Results	5-37
	5.9 Experiment Results Requiring Further Investigation	5-38
	5.10 Recommendations	5-39
6	PRELIMINARY EXPERIMENT SELECTION, GROUPING, AND ORDERING FOR AAP FLIGHT ASSIGNMENT	6-1
	6.1 General Considerations	6-1
	6.2 Ground Rules	6-2
	6.3 Group Selection Technique	6-3

Section		Page
	6.4 Delineation of Specific Flight Schedule and Experiment Assignment Considerations	6-6
	6.5 Delineation of Flight Schedule and Experiment/ Equipment Assignment	6-12
	6.6 Crew Work/Rest Cycles, Typical Operational Tasks, Experiment Ordering, and Scheduling	6-13
7	BIOMEDICAL AND BEHAVIORAL EXPERIMENT STATION CONFIGURATIONS	7-1
	7.1 General Considerations	7-1
	7.2 Biometric Experiment Station	7-3
	7.3 Design of the Micro-Chem Experiment Station	7-12
8	EXPERIMENT MEASUREMENT PARAMETERS	8-1
	8.1 Major Considerations	8-1
	8.2 Measurement Parameters for Physiological Experiments	8-1
	8.3 Measurement Parameters for Biochemical/Cytological Experiments	8-5
	8.4 Measurement Parameters for Behavioral Experiments	8-13
9	EXPERIMENT EQUIPMENT	9-1
	9.1 Biomedical Equipment Description	9-1
	9.2 Physiology Experiment Equipment Description	9-2
	9.3 Biochemical/Cytological Experiment Equipment Description	9-76
	9.4 Behavioral Experiment Equipment Description	9-96
	9.5 Biomedical Equipment Weight, Power, and Volume	9-112
	9.6 Data Management Characteristics	9-116
	9.7 Equipment Development Schedule and Status	9-119
10	RECOMMENDED FUTURE BIOLABS STUDY	10-1
	10.1 Background	10-1
	10.2 Objectives and Scope of Future Biolabs Program	10-5
	10.3 Experiment Analysis Refinement	10-6
	10.4 Interface Requirements – Spacecraft and Experiments	10-9
	10.5 Biomedical Experiment Equipment Design	10-11
	10.6 Fabrication Plan	10-13

Section		Page
	10.7 Test Program	10-14
	10.8 Data Management	10-18
	10.9 Preparation of Flight-Prototype Development Program Plans	10-19
	10.10 Program Plan for Future Biolabs Study	10-20
	10.11 Organization and Management	10-23
	10.12 Project and Schedule	10-23
11	REFERENCES	11-1

ILLUSTRATIONS

Figure		Page
1-1	ORL Biomedical/Behavioral Flight-Qualified Equipment Development Schedule	1-12
2-1	Configuration for Apollo Applications Program (AAP)	2-2
2-2	Transition Phases for Launch-to-Earth Orbit (AAP)	2-5
2-3	Interior Profile – LEM Laboratory	2-8
2-4	Internal Cabin Arrangement for Biomedical/Behavioral Equipment in LEM Laboratory (Proposed Layout)	2-17
2-5	Recommended EVA Hatch Airlock for AAP	2-19
4-1	LEM Laboratory Mockup	4-8
4-2	General AAP LEM Laboratory Configuration	4-9
4-3	Proposed AAP LEM Laboratory Biomedical/Behavioral Experiment Station Arrangements	4-10
4-4	Internal View of LEM Laboratory Mockup (View Aft in Midsection Area)	4-12
4-5	Internal View of LEM Laboratory Mockup (View Aft of Biometric Experiment Station	4-13
6-1	Experiment Ordering Based on Experiment Modular Block Approach	6-25
6-2	Representative Biomedical Program Experiment Assignment and Scheduling for Flight 513 – Preliminary	6-29
7-1	Proposed AAP LEM Laboratory Biomedical/Behavioral Experiment Station Arrangements	7-2
7-2	General Mockup Configuration Layout of the Biometric Station	7-4
7-3	Biometric Station – Physiology Display and Control Panel	7-7
7-4	Fully Bioinstrumented Subject Positioned in the Lower Body Negative Pressure Device (LBNP)	7-9
7-5	Main Display and Control Panel of the Apollo Command Module	7-13
7-6	Initial Micro-Chem Station Console Layout	7-18

Figure		Page
7-7	Second Generation Micro-Chem Station Console Layout	7-19
7-8	Third Generation Micro-Chem Station Console Layout	7-20
7-9	Micro-Chem Station – Rear View	7-21
7-10	Micro-Chem Station – Side View	7-22
7-11	Micro-Chem Station, Showing Hinged Panel Pivots for Access to Rear	7-24
9-1	Suggested Physiology Bioinstrumentation System	9-5
9-2	Physiology Display/Control Panel	9-8
9-3	Pulmonary Control/Input Panel	9-9
9-4	Personal Data Acquisition Equipment	9-16
9-5	Gemini Oral Temperature Signal Conditioner	9-18
9-6	Typical Gemini/Apollo Signal Conditioners	9-19
9-7	Apollo Electrode (2.5X)	9-22
9-8	Electrode Skin Preparing Apparatus	9-23
9-9	Apollo ECG Signal Conditioner	9-25
9-10	Oral Temperature Thermistor Probe (2.5X)	9-28
9-11	Hand Bulb With Pressure and Korotkow Indicator	9-30
9-12	Intrathoracic Impedance Waveform and Its Extrapolation	9-34
9-13	Prototype Impedance Cardiograph Electrode Harness	9-35
9-14	Detail of Dual-Band Impedance Cardiograph Electrodes	9-37
9-15	PCG Microphone (2.5X)	9-40
9-16	Typical Laboratory CPG Apparatus	9-41
9-17	Mockup of Capacitance Plethysmograph Used in Study	9-42
9-18	Apollo DC-DC Converter	9-44
9-19	Apollo Bioinstrumentation Assembly	9-46
9-20	Mockup of Signal Conditioner Belt Used in Study	9-48
9-21	Ear Oximeter	9-50
9-22	Alternate System for Measurement of Cardio Output	9-53
9-23	Urine-Collection Process Using Transparent Plastic Flask and Motor-Driven Centrifuge	9-57

Figure		Page
9-24	Urine-Freezing Unit – Cryogenic Refrigerator Containing Solid Mixture of Ethanol and Water	9-58
9-25	Development-Model Ergometer Used in Study	9-61
9-26	Lower Body Negative Pressure (LBNP) Device Base Plate	9-63
9-27	LNBP Device Body Seal	9-64
9-28	LBNP Device in Collapsed Mode	9-64
9-29	Fully Bioinstrumented Subject in LBNP Device	9-66
9-30	Over-all View of Bioinstrumented Subject in LBNP During Study Test Mode	9-66
9-31	Neck Cuff Device Mockup Used in Study	9-67
9-32	Motion Chair in Graybiel/Miller Litter-Chair Configuration Within LEM Laboratory	9-69
9-33	Scintillation Counter and RISA Kit Mockups Used in Study	9-72
9-34	Bone Densitometer Mockup Used in Study	9-74
9-35	Design of pH and pCl Electrode Syringes	9-83
9-36	Type B Micro-Sampler	9-84
9-37	Adsorption Column	9-85
9-38	Type A Syringe	9-87
9-39	Type B Syringe	9-87
9-40	Type C Syringe	9-88
9-41	Type D Syringe	9-88
9-42	Reagent Bottle	9-90
9-43	Reagent Port	9-90
9-44	Gaseous Reagent Addition Device	9-91
9-45	Staining Apparatus	9-92
9-46	Microorganism Culture Chamber (Liquid)	9-93
9-47	Microorganism Culture Chamber (Particulate)	9-93
9-48	Electromagnetic Trap	9-94
9-49	Telemicroscope	9-95
9-50	Oculometer	9-109

Figure		Page
9-51	Gemini Full-Pressure Suit (G-3C) Utilized in the Study (Visor Up, Gloves Off, Vented Mode)	9-111
9-52	Main Display and Control Panel Configuration of Apollo Command Module	9-113
10-1	Biomedical Laboratory Development Schedule	10-2
10-2	Recommended Schedule for Future Biolabs Study	10-21

TABLES

Table		Page
1-1	Summary of Preliminary Study Results Relative to Times Required to Conduct Individual Experiments	1-4
1-2	Summary of Preliminary Study Results Relative to Times Required to Conduct Integrated Experiments	1-5
1-3	AAP Biomedical and Behavioral Experiment/Equipment Summary	1-9
1-4	Experiment Assignment for 15-Vehicle Mission Program	1-11
2-1	Summary of Interior Volume Distribution in LEM Laboratory	2-16
2-2	AAP Missions and Flight Characteristics	2-21
4-1	Representative Experiment Procedure	4-5
4-2	Time-Line Test Worksheet (TLT)	4-17
5-1	Comparison of Estimated Vs. Actual Time-Line Test Results	5-10
6-1	Summary of Spacecraft Flight Characteristics	6-8
6-2	Experiment Assignment for 15-Vehicle Mission Program	6-14
6-3	Crew Schedule – Equal Function Assignment to Crew Members	6-19
6-4	Crew Schedule – Astronaut B as Physician	6-20
6-5	Crew Schedule – 24-Hr Crew-Monitoring Capability	6-21
6-6	Typical Operational and Station-Keeping Tasks for Earth-Orbit System	6-23
6-7	Experiment Ordering for Flight 513	6-27
6-8	Summary of Experiment Time and Comparison of Preliminary Biomedical Time Requirements	6-59
8-1	Physiology Experiment Parameters	8-3
8-2	Physiology Experiment Parameter Commonality	8-6
8-3	Microscopy/Chemistry Experiment Parameters	8-9
8-4	Microscopy/Chemistry Experiment Parameter Commonality	8-11
8-5	Behavioral Experiment Parameters	8-15

Table		Page
9-1	AAP Biomedical and Behavioral Experiment/Equipment Summary	9-3
9-2	Signal Routing and Control Matrix	9-13
9-3	Cardio Kit Equipment	9-20
9-4	Pulmonary Kit Equipment	9-49
9-5	Description of Kits Required to Support Biochemical and Cytological Experiments	9-97
9-6	Reagent Supply Requirements	9-102
9-7	Spectrophotometer Filter Requirement	9-107
9-8	Physiology Equipment Profile	9-115
9-9	Microscopy Chemistry Equipment Profile	9-116
9-10	Behavioral Equipment Profile	9-117
9-11	Microscopy/Chemistry Data Management Profile	9-120
9-12	Physiology Data Management Profile	9-121
9-13	Behavioral Data Management Profile	9-123
9-14	Physiology Equipment Development Status Identification	9-124
9-15	Microscopy Chemistry Equipment Development Status Identification	9-125
9-16	Behavioral Equipment Development Status Identification	9-126
9-17	Biomedical Experiment Group Development Schedule	9-127

1 INTRODUCTION

Section 1
INTRODUCTION

1.1 PURPOSE OF AAP STUDY

The National Aeronautics and Space Administration (NASA) is investigating the capability of orbital research laboratories (ORL) for providing solutions to problems of manned spaceflight. To this end, Lockheed Missiles & Space Company (LMSC) was given the task of determining preliminary time estimates and feasibility for conducting the NASA-specified Biomedical and Behavioral Experiments within a modified LEM ascent stage (LEM Laboratory) of the Apollo Applications Program (AAP). This task represented an amendment to the prior Biolabs Study contract previously completed by LMSC for NASA (Ref. 1-1) to develop conceptual designs and optimization of measurement devices for biomedical and behavioral testing for orbital research laboratories.

1.2 SCOPE OF STUDY

The AAP study effort for time line test and feasibility analysis for the biomedical program was divided into six major tasks which may be summarized as follows:

- Preparation of detailed space-applicable experiment procedures for the NASA biomedical (Series 0100) and behavioral (Series 0200) experiments
- Design and construction of a "semihard" mockup of the LEM Laboratory
- Conduct of time-line tests and feasibility analysis of specified experiments
- Establishment of grouping and ordering of experiments based on technical feasibility, equipment utilization, medical objectives, and total measurement time
- Definition of experiment equipment characteristics, development schedules, and costs
- Development of a recommended experiment design, analysis, and development program for a future study

1.3 STUDY RESULTS

Following development of a detailed space-applicable procedure for each NASA specified experiment, the experiment was conducted several times within the LEM Laboratory mockup to determine the time required to perform the experiments and the feasibility of conducting the experiments within the crew cabin area of the Laboratory. Results of the testing and analysis permitted the application of this preliminary data to the development of initial ordering of experiments for a representative AAP flight (i.e., a typical 45-day mission). The time-testing and feasibility analysis also provided information leading to the integration of certain experiments, thus reducing considerably the actual time required to conduct the experiment. The integrated experiments were then analyzed to determine the most optimum grouping and a representative 45-day crew work/rest cycle developed to illustrate the selected biomedical and behavioral experiment ordering.

The necessity for developing detailed experiment procedures resulted in further definition of equipment requirements and associated characteristics such as weight, power, and volume. Once equipment characteristics data became available, it was possible to develop a preliminary equipment development program schedule and supporting costs.

The study also resulted in realization of the need for a future study to achieve the following objectives:

- Further definition of experiment time requirements on the basis of a greater degree of functional realism
- Development of more definitive equipment designs and specifications
- Development of functional equipment where only mockup equipment is available
- Refinement of experiment definition
- Consideration in greater depth of data management equipment and performance requirements
- Performance of tradeoff evaluations to determine the relative merits of in-flight vs. ground analysis of biomedical samples (e.g., urine, blood, feces)

- Determination of the most desirable and feasible assignments of particular experiments to particular AAP flights in the light of AAP requirements and objectives and of payload and LEM Laboratory constraints.

1.4 EXPERIMENT TIME-LINE TESTING AND FEASIBILITY ANALYSIS

Prior to the initiation of time-line testing and feasibility analysis, detailed experiment procedures had to be developed and a mockup of the modified LEM ascent stage constructed. Experiment procedures were initially developed for ground use and then modified for space application. The preparation of the individual experiment procedures led to the ultimate development of certain integrated experiment procedures. The LEM ascent stage drawings prepared by the Grumman Aircraft Engineering Corporation were reviewed and engineering drawings of the crew cabin area of the LEM Laboratory were prepared for construction of the mockup.

Time-line testing of subjects conducting both unintegrated and integrated experiments was performed in the LEM Laboratory mockup. Each experiment was conducted three times with three different subjects (one trained in the area of the experiment, one non-trained, and a third non-trained but wearing a Gemini pressure suit). Each subject was thoroughly familiarized with the experiment procedure, equipment, and the Laboratory mockup.

Preliminary data indicating the times required to conduct the experiments are presented in Table 1-1 (unintegrated experiments) and in Table 1-2 (integrated experiments).* It must be emphasized that the data are preliminary and are only the first step in obtaining clearly defined experiment times under 1-g conditions. Subsequent time-line testing, utilizing even more functional equipment (in some instances mockup equipment was used in this study), will yield data with a higher degree of validity.

One of the most important ancillary benefits derived from the study was the preliminary specification of a crew work/rest cycle for a 45-day mission. Incorporation of certain biomedical and behavioral experiments (0103 through 0115, 0117 through 0121, 0201,

---

*Integrated experiments are basically a composite of two or more individual experiments written in an integrated format.

Table 1-1

SUMMARY OF PRELIMINARY STUDY RESULTS RELATIVE TO TIMES REQUIRED TO CONDUCT INDIVIDUAL EXPERIMENTS

Experiment	Trained			Untrained			Untrained, Pressure-Suited		
	Time (min: sec)			Time (min: sec)			Time (min: sec)		
	Low	Mean	High	Low	Mean	High	Low	Mean	High
0101	43:36	45:36	46:36	44:48	45:45	47:44	Not Feasible		
0102	40:01	42:06	43:08	41:12	42:35	43:16	Not Feasible		
0103	19:21	20:15	20:35	20:35	25:03	27:17	Not Feasible		
0104	29:27	33:13	35:06	34:52	35:36	35:58	Not Feasible		
0105	31:15	33:44	34:58	35:29	36:28	36:58	Not Feasible		
0106	18:36	18:53	19:02	14:27	19:36	22:11	Not Feasible		
0107	24:43	25:22	25:42	28:21	30:06	30:58	Not Feasible		
0108	41:40	42:01	42:12	38:57	40:02	40:35	Not Feasible		
0109	10:29	10:46	10:59	9:56	11:47	12:42	10:12	12:09	13:02
0110	13:03	13:59	14:27	10:54	11:27	11:43	Not Feasible		
0111/Phys	28:32	32:15	34:06	31:38	32:52	33:29	Not Feasible		
0111/MC	93:47	97:43	99:43	96:32	102:19	105:12	97:43	102:16	104:33
*0112	1234:12	1240:38	1244:06	1283:41	1327:49	1349:53	1304:42	1307:25	1323:46
*0113	1049:04	1053:43	1056:02	1044:26	1058:33	1065:36	1052:18	1058:03	1060:55
0114	24:22	24:30	24:35	23:39	24:28	24:52	22:59	24:21	25:02
0115	27:11	27:58	28:22	32:07	33:40	34:11	Not Feasible		
*0117	2194:48	2205:51	2211:22	2189:40	2207:08	2215:52	2218:41	2226:08	2230:06
0118	79:35	81:22	82:16	98:21	104:10	105:87	88:04	91:55	93:51
0119	122:49	124:58	126:02	124:29	124:56	125:10	122:50	122:57	123:00
0120	57:19	57:31	57:37	60:48	61:06	61:15	54:23	54:26	54:28
0121	23:16	25:16	29:16	38:49	39:36	39:59	36:02	36:35	37:41
0201	25:24	26:59	27:46	26:10	27:31	28:11	Not Feasible		
0202	45:37	47:46	48:51	49:02	51:04	52:05	47:51	51:33	53:34
0203	11:22	11:28	11:51	12:33	12:56	13:07	12:47	13:06	13:15
Blood Collection	52:30	52:58	53:12	52:41	53:40	54:09	Not Feasible		

*Since little or no preservation has been included, experiment times include lengthy chemical reaction, mix, or centrifuge runs, which increase the total basic time required to conduct the experiment.

Table 1-2

SUMMARY OF PRELIMINARY STUDY RESULTS RELATIVE TO TIMES REQUIRED TO CONDUCT INTEGRATED EXPERIMENTS

Experiment	Trained			Untrained			Untrained, Pressure-Suited		
	Time (min: sec)			Time (min: sec)			Time (min: sec)		
	Low	Mean	High	Low	Mean	High	Low	Mean	High
A 0103 0106 0107 0108	30:11	31:04	31:31	36:12	37:25	38:02	Not Feasible		
B 0104 0109 0110	26:08	28:51	30:13	33:52	37:33	39:23	Not Feasible		
C 0111 (Partial) 0112 0113 0117	1,939:27	1,957:30	1,966:32	1,921:30	1,954:28	1,970:57	1,981:52	2,009:53	2,023:33
D 0118 0119 0120 0121	282:59	291:07	295:11	322:27	328:16	331:11	301:19	306:26	309:00
E 0201 0202 0203	36:46	38:40	39:37	38:43	40:26	41:18	Not Feasible		

A – Cardiovascular
B – Cardiopulmonary
C – Biochemical
D – Cyto-Microbiological
E – Behavioral

LOCKHEED MISSILES & SPACE COMPANY

and 0203) into the work/rest cycle resulted in a very preliminary determination of total biomedical/behavioral experiment time required for the flight, and of the total hours each crew member was involved in the biomedical experiment program. These results are as follows:

	Experiment (hr)		
Crew Member	Available	Required for Biomedical and Behavioral Purposes	Portion of Crew-Member Time (%)
Commander	262	47	18
Physician	392	267	68
Engineer	306	47	16
Total	960	361*	

Analysis of the foregoing data reveals that of the total crew-member hours available for experiment purposes, only 38 percent was actually required for accomplishment of the highly comprehensive biomedical and behavioral experiment program.

1.5 ORL MISSIONS AND FLIGHT SCHEDULE REQUIREMENTS

LMSC was provided with a basic list of 15 mission flight assignments and corresponding flight numbers upon initiation of the study contract. It is recognized that the flight numbers, vehicle configurations, and mission durations may be changed for planning purposes in the near future. However, the mission configurations (CM, SM, and LEM), and planned mission flight durations (14, 28, 45 and 90 days) will, in all likelihood, still be considered as basic elements of the Apollo Applications Program.

The initial flight employs the basic Block-II Apollo Command Module and Service Module for a 14-day mission. The next 5 flights also are scheduled for 14 days but employ the LEM ascent stage with minimum modification. Minimum modification is being defined by the Grumman Aircraft Engineering Corporation under a Phase B contract with the NASA Manned Spaceflight Center (MSC).

These flights permit extensive engineering checkout of experimental apparatus and a thorough evaluation of experiments for 14 days. The variation of orbital characteristics,

such as inclination ranging from 28.2 deg to 90 deg, and orbital altitude ranging from 200 nm to 19,350 nm, permit experiments covering the effect of the radiation environment. The next 8 flights, constituting the remainder of the 15-flight program, employ the LEM Laboratory and permit significant advancement in mission duration.

The initial 45-day flight is scheduled for Flight 513. Subsequently, longer-duration flights will be achieved by using a rendezvous maneuver. In this manner, two flights will achieve a combined mission duration capability of 90 days, while successive rendezvous maneuvers with the last three flights will result in a total mission duration of 135 days.

Examination of the three spacecraft configurations indicated that the initial flight (No. 209) should be used only for the flight testing of major experiment equipment. The next five flights will allow experiment engineering checkout, and the last nine flights will permit extensive biomedical data collection on missions of increasing duration.

1.6 EXPERIMENT SYNOPSIS

During LMSC review of the objectives and major significance of the NASA-specified experiments (Biomedical – 0101 through 0121; Behavioral – 0201 through 0203), it was established that the scope of such experiments covered the following areas:

- Space medicine
- Validation of protective devices (countermeasures)
- Assessment of psychomotor, sensory, and cognitive functions
- Operational assessment of behavior

1.7 FLIGHT PAYLOAD SPECIFICATION

Detailed review of the experiments by LMSC produced a description of the experiment and equipment requirements which is conveniently summarized in Table 1-3. An interesting aspect is the evident commonality of much of the equipment. This characteristic permits a reduction in such aspects as overall weight and size and contributes to more efficient scheduling and grouping of experiments.

Four major considerations included in the group experiment selection matrixes were analyzed prior to establishing an experiment assignment per flight, namely, flight objectives, spacecraft capabilities, performance parameters, and importance of the measurement to the program. The initial flight, which can increase the mission time to 28 days by means of the rendezvous maneuver, offers the first significant opportunity to conduct a comprehensive experiment program. Subsequent missions that increase the mission duration to as long as 135 days will provide essential biomedical data for future manned spaceflight programs. Table 1-4 shows the recommended experiment assignments for the individual flights.

1.8 EQUIPMENT DEVELOPMENT PLAN

During the course of the Apollo Extension Systems Study (Ref. 1-2), LMSC reviewed the results of the program planning conducted by the Boeing Company, North American Aviation, Inc. (NAA), and Grumman. Figure 1-1 shows the overall development time-span established by Boeing (34 months), NAA (24 months), and Grumman (21 months) for their design concepts. LMSC identified the developmental pacing items as well as all ancillary equipment for each experiment. Vendor experience and available data from industry furnished the basis for the majority of schedule and cost information. Results of this study are reflected in Fig. 1-1.

LMSC recommends a six-month checkout and integration requirement and initiation of prototype development for specified pacing equipment six months prior to normal hardware go-ahead. Compliance with such recommendation and requirements will permit inclusion of all experiments in the early flights, except for Experiment 0114, which requires the development of an endoradiosonde pill.

1.9 REPORT ORGANIZATION

The contents of this report have been organized into eleven sections as listed below. Sections 2 (AAP Vehicle Configuration and Mission and Flight Schedule Requirements) and 3 (Experiment Synopsis) have been included to provide the reader with background

BIOMEDICAL EQUIPMENT SUMMARY

NASA EXPER. NO.	BIOMEDICAL/BEHAVIORAL EXPERIMENTS	Motion Chair	Goggles and Fiber Optics	Test Target	Cardio-Kit	Signal Conditioners	Sensors	Belt Harness	Pulmonary Kit	Masks, Tubes, Valves	Ear Otoinster	Physiology Display/ Control Panel	Mass Spectrometer – On-Board	Lower Body Negative Pressure Device	Neck Cuff Device	Occluding Cuffs	Ergometer	Capacitance Plethysmograph	Strength Measurement Device	(TV Camera – On-Board)	12-Thermistor Harness	Mouse-Chem Station	Centrifuge	Spectrophotometer	Fluorometer	pH-pCO2 Controls	Particle Counter	PM Receiver	Reagents	Data-Entry Keyboard	Sonic Mixer	Temperature Blocks	Timers	Refractometer	Telemicroscope (Camera – On-Board)	Clot Timer	Electromagnet	Statistic Apparatus	Electronic Stereoscope	Experimental Kits	Bone Densitometer	Scintillation Counter	Urine Collection System	Coulometer	Audio Tape and Microphone	Performance Panel (Pressure Suit – On Board)	Thermal Suit	Thermal Suit Support Equipment	Endocrinosonde Pill	Photo-Anthropometric Technique	FIRA Kit, Tethered Water Kit	NASA EXPER. NO.
0101	Effect of Linear Acceleration on Otolith Under Weightlessness	X	X																	X															X																		0101
0102	Effect of Head Rotation and Weightlessness on Semicircular Canal Functions	X	X	X																X															X																		0102
0103	Response of Human Circulatory Dynamics to Provocative Stimuli During Space Flight				X	X	X	X				X		X																																						0103
0104	Work Capacity and Circulatory Response				X	X	X	X				X					X																																			0104
0105	Changes in Blood and Other Body-Fluid Compartment Volumes																																								X	X								X	0105
0106	Carotid Baroreceptor Reflexes and Arteriolar Activity				X	X	X	X				X			X			X																																		0106
0107	Changes in Venous Compliance Caused by Zero Hydrostatic Pressure				X	X	X	X				X		X				X																																		0107
0108	Circulatory-Reflex Change Countermeasure Effectiveness Under Weightlessness				X	X	X	X				X		X	X	X	X	X																																		0108
0108a	Cardiovascular Functioning[a]				X	X	X	X				X		X	X					X																																	0108a
0108b	Cardiopulmonary Functioning[b]				X	X	X	X	X	X		X	X				X																																			0108b
0109	Effect of Prolonged Spaceflight on Pulmonary Function								X	X		X	X																																							0109
0110	Effect of Prolonged Spaceflight on Ventilatory Gas Exchange								X	X	X	X	X																																							0110
0111	Effect of Weightlessness and Confinement on Muscle Mass and Strength	X			X	X	X	X				X							X				X	X	X				X	X	X		X								X		X							X		0111
0112	Mineral Metabolism in Man During Prolonged Spaceflight																						X	X	X		X			X	X	X	X	X							X	X	X									0112
0113	Nutritional Status of Man During Prolonged Spaceflight																						X	X	X		X			X	X	X	X	X	X							X		X									0113
0114	Effect of Weightlessness on Gastrointestinal Mobility and pH																											X														X							X			0114
0115	Thermal Regulation in Man During Prolonged Spaceflight				X	X	X					X		X							X																											X				0115
0116	Deleted by NASA Direction																																																			0116
0117	Effect of Spaceflight on Human Neuroendocrine Function																						X	X	X	X	X			X	X	X	X	X	X							X		X									0117
0118	Dynamics of Human Hemic Cell Proliferation, Distribution, and Destruction During Prolonged Spaceflight																						X	X	X			X		X	X	X	X	X		X	X			X	X	X										0118
0119	Human Hematological Defenses During Prolonged Spaceflight																						X	X				X				X	X	X		X	X		X	X		X										0119
0120	Hemostasis																						X	X										X		X	X	X				X										0120
0121	Microbiological Evaluation (Nose, Mouth, Throat, Skin, and Gastrointestinal Tract)																																			X	X					X										0121
0201	Astronaut Inflight Performance (Continuous Survey of Flight-Crew Sensory and Perceptual Processes)																																											X	X							0201
0202	Astronaut Inflight Performance (Continuous Survey of Flight-Crew Psychomotor Function Processes)																																													X	X					0202
0203	Astronaut Inflight Performance (Continuous Survey of Flight-Crew Higher Mental Processes)																																													X						0203

[a] Integrated experiment, including Experiments 0103, 0106, 0107, 0108

[b] Integrated experiment, including Experiments 0104, 0109, and 0110

Table 1-3 AAP Biomedical and Behavioral Experiment/ Equipment Summary

Table 1-4

EXPERIMENT ASSIGNMENT FOR 15-VEHICLE MISSION PROGRAM

Exper. Number	Flight Duration (Days)										
	14	14	14	14	28	45	45	45	90	45	135
	Flight Number										
	209	211	507	509	215/216	513	221	516	518/224	521	523/229/230
0101		$\boxed{X}$			X						
0102		$\boxed{X}$			X						
0103	(X)	$\boxed{X}$			X	X	X	(X)	X		X
0104		$\boxed{X}$			X	X	X	(X)	X		X
0105	(X)	$\boxed{X}$			X	X	X				
0106		$\boxed{X}$			X	X					
0107		$\boxed{X}$			X	X					
0108		$\boxed{X}$			X	X	X	(X)	X		X
0109	(X)	$\boxed{X}$			X	X	X	(X)	X		X
0110		$\boxed{X}$			X						
0111	(X)	$\boxed{X}$			X	X	X	(X)	X		X
0112	(X)	$\boxed{X}$			X	X	X		X		X
0113	(X)	$\boxed{X}$			X	X	X				
0114										X	X
0115			$\boxed{X}$		X	X					
0116	DELETED BY IBM DIRECTION										
0117	(X)				X	X			X		X
0118		$\boxed{X}$	X		X	X	X	(X)	X		X
0119		$\boxed{X}$	X		X	X			X		X
0120	(X)	$\boxed{X}$	X		X	X		(X)	X		
0121		$\boxed{X}$			X	X			X		X
0201	(X)	$\boxed{X}$	X			X					
0202	(X)	$\boxed{X}$	X		X						
0203			$\boxed{X}$		X	X	X	(X)	X		X

(X) = Partial Engineering Equipment C/O

$\boxed{X}$ = Total Experiment Equipment C/O

X = Conduct of Experiment to Secure Bio-data

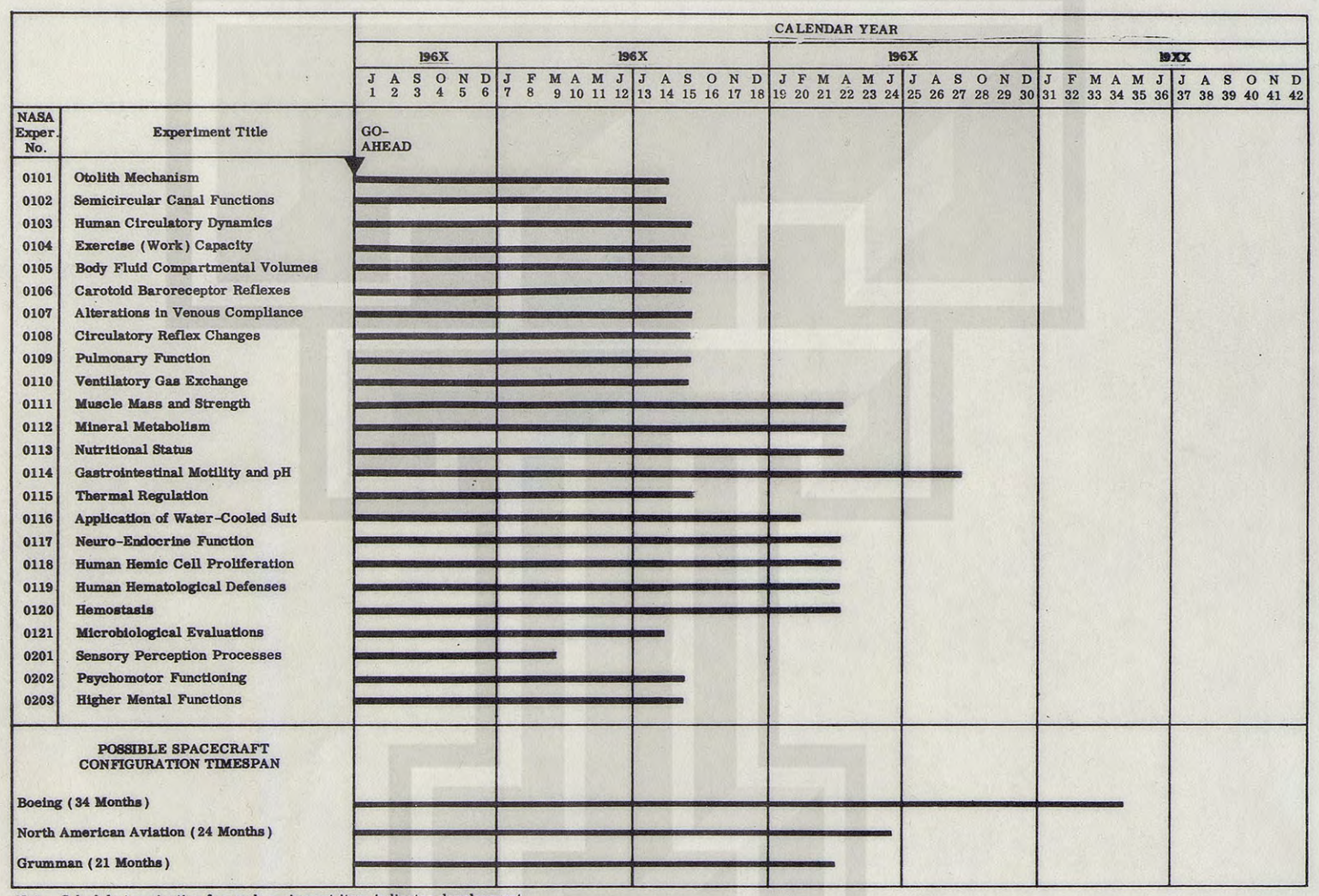

Note: Schedule termination for each equipment item indicates development, flight qualification, and production of units.

Fig. 1-1 ORL Biomedical/Behavior Flight-Qualified Equipment Development Schedule

information concerning the spacecraft configuration, mission characteristics, and biomedical/behavioral experiments. It is recommended that Sections 4 through 9 be examined for specific details regarding the program study.

Section	Title and Description
1	Introduction. A brief introduction to the study, presentation of experiment conduct times, and a general overview of the report content.
2	AAP Vehicle Configuration and Mission and Flight Schedule Requirements. A discussion of the spacecraft configuration, identification of mission assignments, and specification of flight schedules
3	Biomedical and Behavioral Experiment Synopsis. A brief synopsis of the biomedical (100 series) and the behavioral (200 series) experiments currently under consideration by NASA.
4	Program Technical Approach. The technical program approach relative to experiment procedure development, training, mockup development, testing, and data analysis
5	Time-Line Test and Feasibility Analysis Results. Consideration and evaluation of the study results relative to time-line testing and feasibility analysis of the individual and integrated experiments.
6	Preliminary Experiment Selection, Scheduling, and Ordering for AAP Flight Assignment. Discussion of experiment selection for the flight program, and of the ordering of experiments for flight assignment and specification of a representative crew work/rest schedule for Flight 513.
7	Biomedical and Behavioral Experiment Station Configurations. Description of experiment stations for physiology, microscopy/chemistry, and human performance relative to their design for the AAP LEM Laboratory.
8	Experiment Measurement Parameters. Presentation of measurement parameters for each experiment, discussion of commonality of parameters among experiments, and identification of experiment procedure development techniques.

Section	Title and Description
9	Experiment Equipment. Description of equipment, recommended for the biomedical/behavioral experiment equipment package and presentation of relevant design characteristics.
10	Recommended Future Biolabs Study. Description of logical next step in the study program and identification of specific program tasks identified in addition to schedule requirements.
11	References. Identification of referenced documents.

SYNOPSIS

This section presents an overview of the present AAP vehicle configuration concept, and mission and flight schedule requirements. The launch vehicle is considered with respect to an earth-orbital mission. The basic Apollo Command, Service, and Lunar Excursion Modules are briefly discussed. A space-allocation study has been performed on the LEM Laboratory, and the internal compartment envelope was analyzed relative to the biomedical experiment station layout. Minimum modifications of the LEM Laboratory required to conduct the biomedical experiment program are presented. The proposed AAP missions and flight characteristics are discussed for each of the 24 currently planned experiments.

Section 2
AAP VEHICLE CONFIGURATION AND MISSION AND FLIGHT SCHEDULE REQUIREMENTS

2.1 BACKGROUND

The Apollo Applications Program (AAP) is being considered by NASA as a means of attaining the following major objectives:

- Performance of scientific, technological, and biomedical experiments during earth-orbiting flight
- Conduct of scientific and engineering operations during earth-orbiting flight
- Accomplishment of survey missions during lunar orbit
- Conduct of exploration missions on the lunar surface

Various AAP configurations have been studies for NASA by Boeing, NAA, and Grumman. The AAP configuration C was designated by NASA-Headquarters as the concept which LMSC should utilize as a basis for analyzing the biomedical and human-performance measurement system. This configuration comprises a Saturn-IB launch vehicle and Apollo command and service modules, mated to the LEM ascent stage (excluding the ascent propulsion system), which has been termed the LEM Laboratory.

2.2 LAUNCH VEHICLE AND MISSION CHARACTERISTICS

The launch vehicle proposed for the earth-orbital mission—Saturn IB—is the primary launch vehicle used for the Apollo earth-orbit test program (Fig. 2-1). It is a two-stage vehicle capable of placing a 34,000-lb payload in a low-inclination, medium-altitude, earth orbit. The S-I stage of the vehicle consists of a first stage, an interstage section, and an S-IB second stage. NASA has authorized consideration of an upgraded S-IB for greater experiment payload capability.

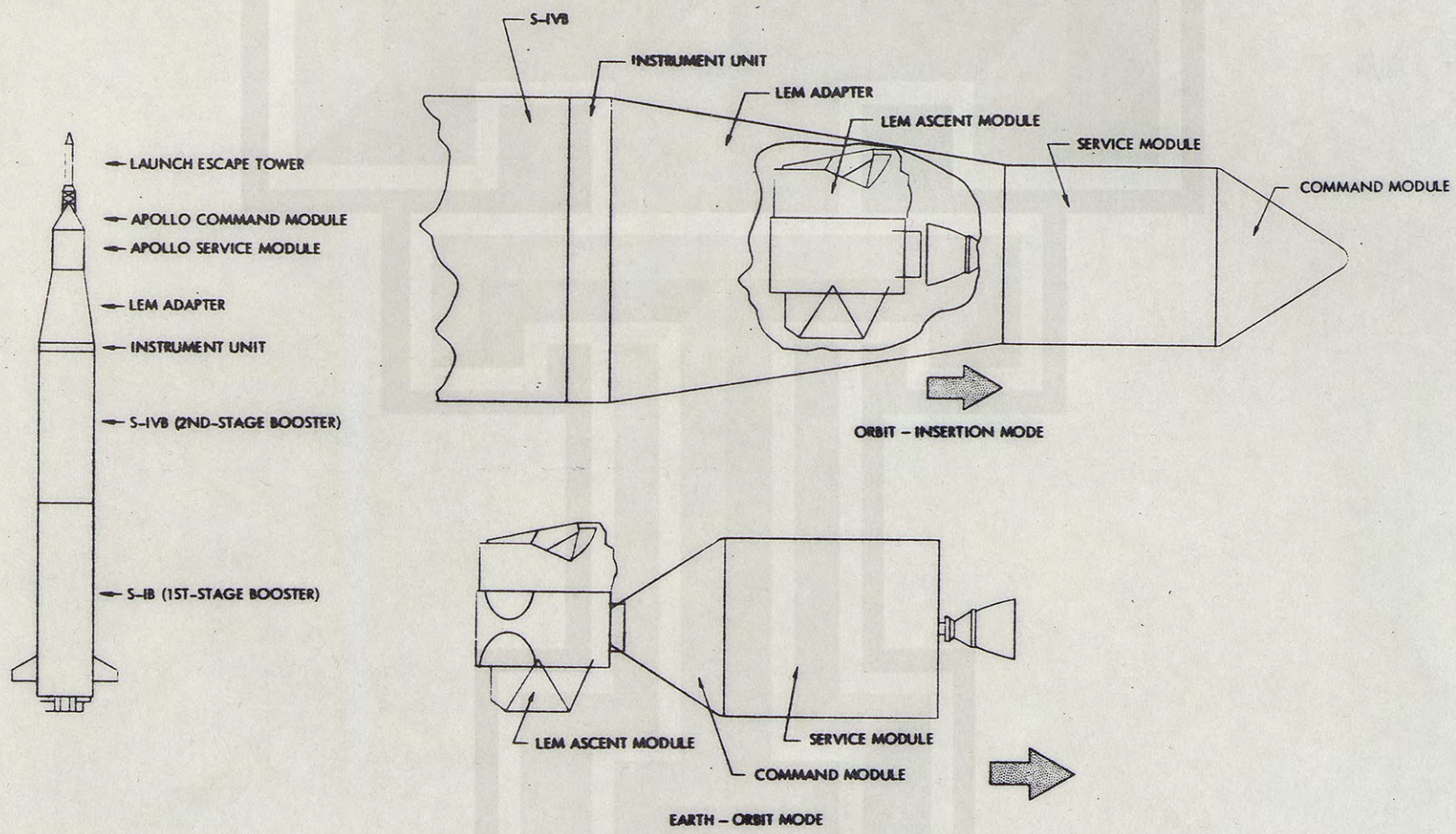

Fig. 2-1 Configuration for Apollo Applications Program (AAP)

Major mission system characteristics are as follows:

• Crew size	3
• Mission duration	14 to 135 days earth orbit
• Weight allocated for experiments	800 lb
• Altitude	200 nm
• Orbital inclination	28.5 deg
• Total volume	
LEM ascent stage	247 cu ft
Service module (SM)	250 cu ft
Command module (CM), crew only	220 cu ft

2.3 BASIC SPACECRAFT CONFIGURATION

The Apollo CM will house the crew during earth launch, mission operation, earth reentry, and landing. The module will contain crew-support systems, displays, controls, equipment requiring direct access by the crew, and all systems needed for earth entry and landing. Access to the LEM Laboratory will be through the hatch located in the crew compartment. LMSC has been specifically informed by NAA that the Block-II Apollo CM can not be used to conduct the Biomedical and Human-performance Program. This restriction therefore will require use of the pressurized LEM Laboratory for all of the biomedical and human-performance measurements.

The Apollo SM is unmanned and nonpressurized. It contains stores and systems that do not require direct crew accessibility and such equipment as the propulsion system for on-orbit spacecraft corrections. For earth-orbital missions, the SM propulsion fuel requirements can be reduced, thus permitting the use of smaller fuel tanks and providing additional space and increased weight capability. This space could be used for experiments; however, any experimental equipment stored in this module will be exposed to the surrounding space environment and available to the crew only by extravehicular activity. The Apollo SM remains attached to the CM throughout the entire space flight; however, it is separated from the CM just prior to earth reentry and is not recovered.

During earth launch, the LEM Laboratory will be contained within the LEM adapter as indicated in Fig. 2-1. After injection into a circular orbit, the stage will be docked to the small end of the CM by means of the basic CM turn-around maneuver, as shown in Fig. 2-2. Two crew members will enter the LEM Laboratory to conduct the experimental program, and one astronaut will remain on mission duty. A crew duty cycle must be established to permit the interchange of crew members.

The laboratory provides a pressurized-oxygen environment, food, water, communications equipment, environmental control for the crew, and stores for 14 days. For extended missions, life support will be provided by the installation of necessary systems in the laboratory. Modifications to the LEM for use in earth-orbital missions will provide 247 cu ft for use as a laboratory or living space.

2.4 AAP FLIGHT CONFIGURATIONS

The physical characteristics of three NASA spacecraft configurations – Apollo CM/SM (14-day capability), LEM ascent stage (unmodified), and LEM Laboratory – were reviewed to determine the constraints and capability of the individual configurations to support the Biomedical/Behavioral Experiments.

2.4.1 Apollo Command/Service Modules

The Apollo configuration specified for the AAP Program evolved from a series of studies conducted by NAA for the NASA-MSC. The primary purpose of these studies was the determination of the extended mission capability of the basic Block-II Apollo vehicle. These studies resulted in defining the modification requirements in order to make the Apollo command and service modules suitable for earth-orbit missions of 14 to 135-day duration.

The external geometry of the spacecraft scheduled for Flight 209 (the initial ORL flight) is identical with that of the present Apollo spacecraft except for the solid retro-engines mounted on the aft bulkhead of the service module. These are contained within

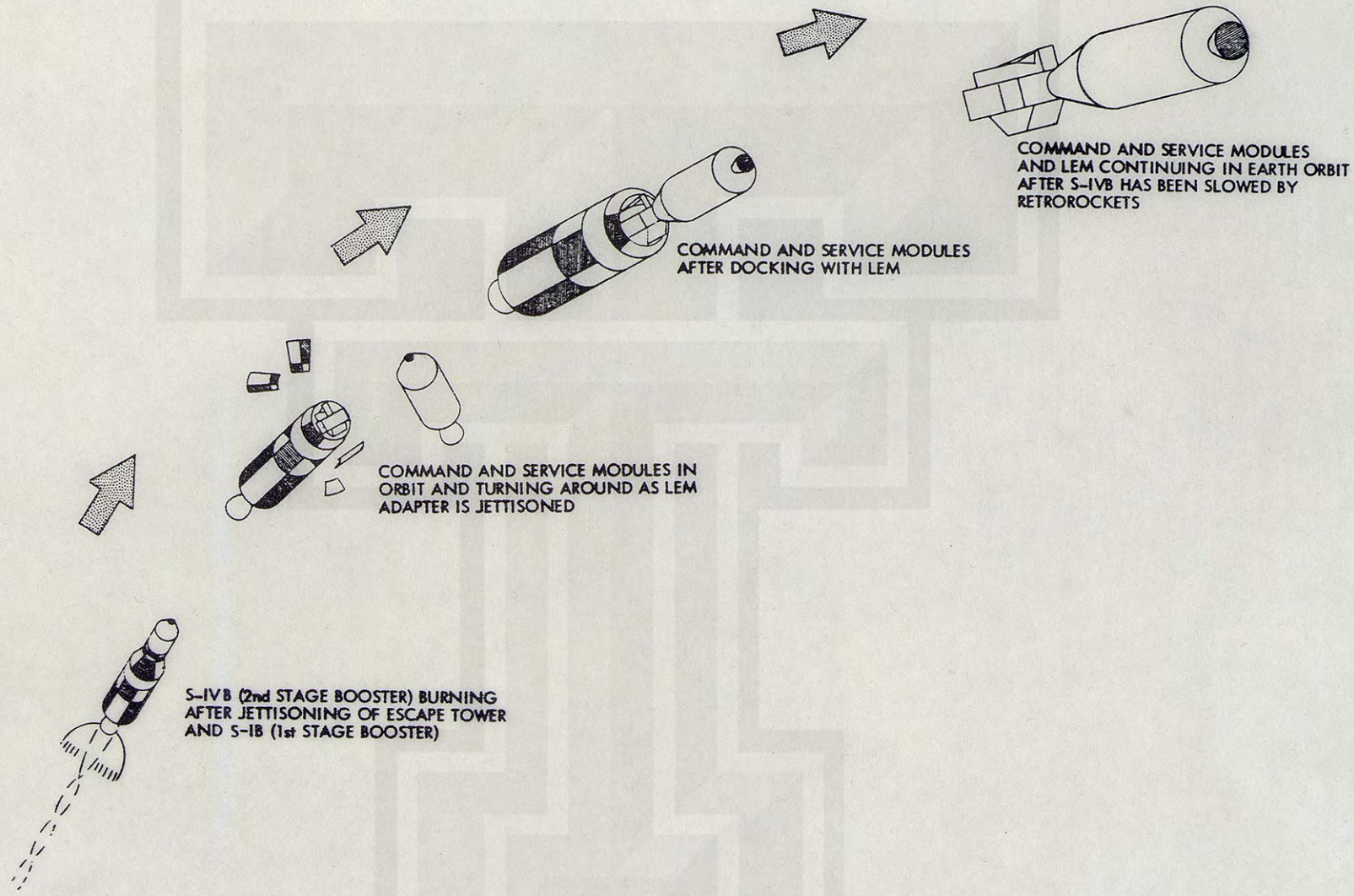

Fig. 2-2 Transition Phases for Launch-to-Earth Orbit (AAP)

the present unmodified LEM adapter structure. Minimum changes required for the selected two-man capability involve the removal of one couch. Both the right-hand couch and the center couch can be made removable. For the purpose of this study, LMSC has assumed that the right-hand couch is removed. Other minimum changes require changes in the internal arrangement, and allocation of space for additional spares and supplies. This allocation involves removal of all unnecessary stores and replacement of food and other supplies in the vacated locations.

The Apollo SM structural design is retained with minor modification. The main liquid-propulsion system is modified by the deletion of one fuel tank, one oxidizer tank, and associated plumbing. The remaining main propellant sump tanks are replaced with small spherical containers of sufficient capacity to contain the desired quantity of service propulsion-system propellants. The present propulsion system, main engine, and thrust structure are used without modification. The present four, large, cylindrical, propellant tanks are replaced by only two small spherical tanks, and the plumbing systems associated with the large tanks are removed to save weight. The present pair of helium-pressurant tanks located on the centerline of the service module are removed and replaced with one smaller tank in approximately the same location.

The Apollo configuration utilized in all 15 missions consists of the CM, the SM, and the spacecraft adapter. The conically shaped CM is the major unit of the spacecraft. It is a recoverable module that remains essentially unchanged for all 15 missions. The module provides a pressurized cabin for the two or three-man crew and contains, in conjunction with the SM, all the necessary equipment for their support, as well as operational equipment for spacecraft control and recovery. This support, as far as life support, expendables, power, etc., are concerned, is only sufficient for a 14-day mission. Extension of the mission for any longer period requires support from the LEM Laboratory. The command module has three distinct sections—the forward, aft, and crew compartments. Removable segments and doors provide access to the aft compartment equipment. The forward compartment contains the forward egress hatch which can be utilized for storage and location of experimental apparatus. The aft compartment contains the lower portion of the primary structure and associated equipment.

The crew compartment contains the spacecraft controls, display panels, observation windows, access hatches, equipment bays, and crew facilities.

2.4.2 Features of LEM Laboratory

Two primary subassemblies of the LEM Laboratory are structurally significant to the volume requirements and equipment stowage needs of the Biomedical and Human-Performance Measurement Program. These subassemblies are the main cabin (which faces from Station Z + 27 forward) and the midsection. (See Fig. 2-3.)

Main Cabin. This section consists of a 92-in.-diameter, aluminum-alloy cylinder, stiffened by 2-in.-deep circumferential frames which are spaced approximately 10 in. apart. The cylinder is made up of two skin subassemblies, each covering 180 deg of the cylinder, with a splice at the top and bottom. Integral members, such as longerons, are welded to the skin segments to minimize the number of mechanical joints. The forward hatch is included in this section.

Midsection. The midsection is made up of two major weld assemblies. The upper weld assembly contains a machined deck, a docking tunnel and ring, and two cylindrical segments of a chem-milled skin. The lower assembly consists of a machined engine support deck and the two lower cylindrical segments of a chem-milled skin. The segments are stiffened by 2-in.-deep circumferential frames spaced approximately 10 in. apart. The forward and aft ends of the midsection skin-deck assemblies are attached to two machined bulkheads at ± Station Z + 27. The upper hatch is located at the top of the midsection.

2.4.3 Communications

The communications system for the AAP includes the following subsystems.

Voice. The voice communication used in the LEM Laboratory allows the astronauts to communicate with earth via S-band frequencies, and with the Apollo CM, or an astronaut engaged in EVA, by means of a very-high-frequency (VHF) link. Capability for

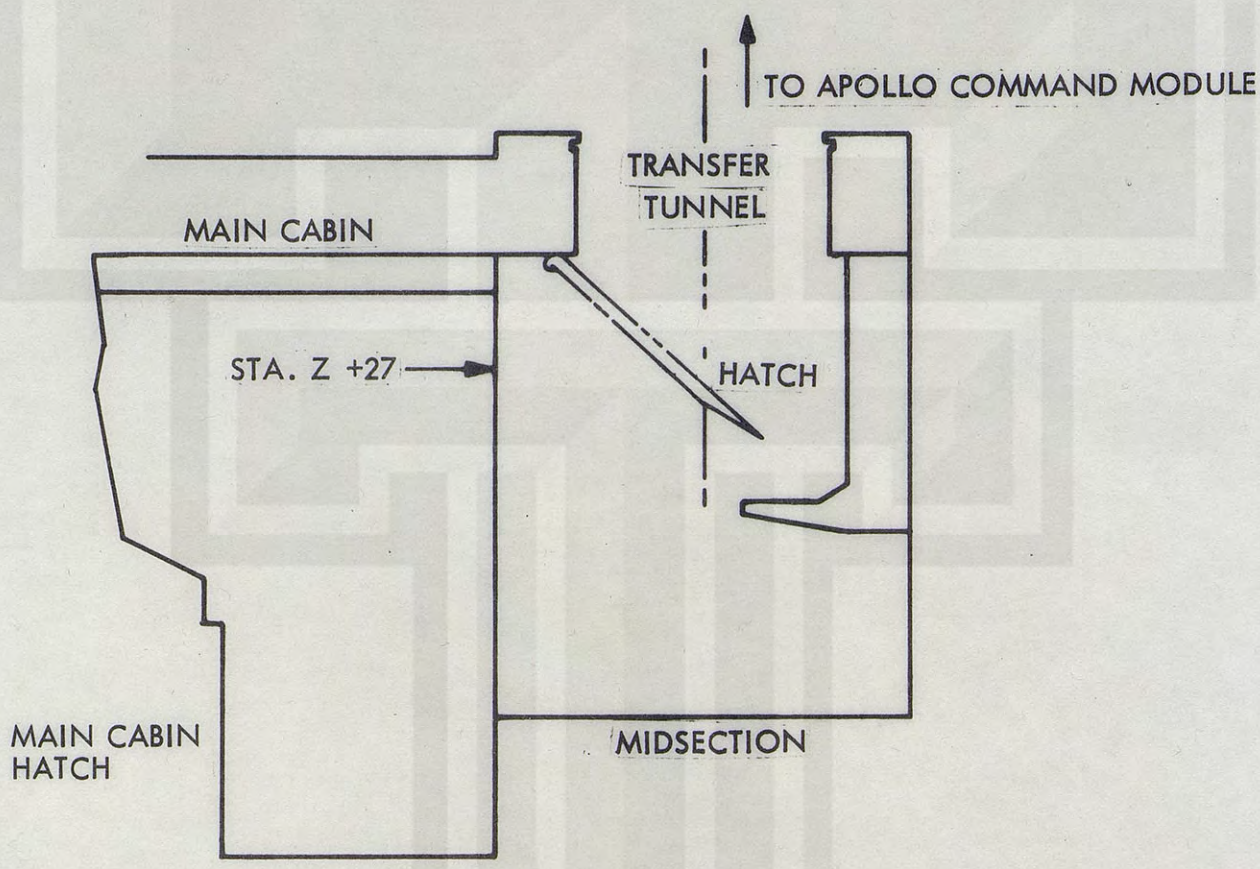

Fig. 2-3 Interior Profile – LEM Laboratory

regular communication between the Laboratory and the CM, and for three-way conferences (Laboratory, CM, and EVA astronaut) is also provided.

Command. The VHF command data transmitted from the ground command center to AAP are channeled to the digital-command receiver/decoder which verifies acceptance of each command word by telemetry. The decoder distributes the command, as required, to the computer, the timing system, or the actuators.

Television. The television system provides a video signal for real-time transmission to the ground for monitoring behavioral and biomedical experiments and a closed-circuit, on-board TV system for observation of astronauts, of the performance of maintenance functions, and of EVA. Functional characteristics of the system are as follows:

- Color—black and white
- Frame rate—30/sec (on board closed circuit)
- Scan lines—525/frame (approx. square)
- Video bandwidth—2.1 Mc

Telemetry. The S-band function provides for transmittal of various types of signals to earth. These included coded and TV signals providing the ground stations with data on spacecraft operation and subsystem functioning, on experimentation/measurement, and on astronaut behavior and condition. The telemetry data are transmitted in the following forms:

- Stored pulse-code-modulation (PCM) data
- Real-time data
- Command verification data

2.4.4 Environmental Control

The environmental control subsystem (ECS) performs the functions necessary for life support and active thermal control for the LEM Laboratory. This subsystem consists of five integrated elements as follows:

- Atmosphere revitalization
- Oxygen and cabin-pressure control
- Heat transport
- Water management
- Cold plates

Atmosphere Revitalization. The atmosphere revitalization element of the subsystem removes carbon dioxide, odors, particles, and other impurities from the spacecraft and cabin atmosphere. It consists of two major assemblies – the space-suit circuit assembly and the cabin air-recirculation assembly. These assemblies are individual units located in the cabin.

Oxygen and Cabin-Pressure Control. This element regulates the oxygen used for replenishing losses resulting from metabolic consumption and/or due to space-suit and cabin leakages. Overall control of these functions is provided by the oxygen-control module. This module, located in the cabin, consists of a series of valves, filters, and regulators mounted on a cast manifold containing all the necessary interconnecting gas passages. This system repressurizes the cabin following unpressurized operation, delays the decrease in cabin pressure after a pressure-shell puncture, and refills the primary oxygen-storage tanks of the portable life-support system (PLSS).

Heat-Transport. The heat-transport element circulates coolant fluid to LEM Laboratory equipment requiring active thermal control and provides heat sinks to which the coolant rejects waste heat. The function of active thermal control includes the cooling of those electronic components which cannot dissipate their heat passively, the warming of supercritically stored hydrogen and oxygen after they leave the storage vessels, and the heating and/or cooling of space-suit circuits and cabin oxygen as required.

Rejection of in-flight waste heat from the coolant loops is provided by the coolant water evaporator, which is located in the aft equipment bay. This evaporation vents its steam overboard through a cutout in the thermal skin of the LEM Laboratory.

Prelaunch waste heat is rejected from the coolant loop by means of a Freon boiler also located in the LEM aft equipment bay. Freon is fed to the boiler from the launch-umbilical tower through the disconnect panel, and discharges into the aft equipment bay after being evaporated in the boiler. After removal of the mobile arming tower, the ECS heat-transport section previously described assumed the heat-rejection function.

Water Management. Potable water for crew consumption, evaporative cooling, and refill of the PLSS water tank is stored by this section of the ECS. This element also controls distribution of stored water, as well as distribution of water reclaimed by the suit-circuit assembly water separators. Reclaimed water is used only for evaporative cooling in the various ECS water evaporators.

Cold-Plates. This element provides heat sinks for electronic components which require active cooling and which do not contain integral provisions for coolant circulation. The majority of the cold plates also serve as structural mounts for the electronic components which they cool. The plates contain either one or two fluid passages through which the loop coolant of the heat-transport section is circulated.

2.4.5 Crew Provisions

In the current LEM, the commander and systems engineer stand side by side in the main cabin section of the LEM during lunar descent. This cockpit area has been designed to assure maximum external visibility. The main instrument panel is centered between the astronauts to facilitate sharing of control operation, and display interpretation and reading. The cabin ceiling height varies from 74.5 in. to 79.64 in., with the highest point at the cockpit centerline. The internal volume of the crew compartment is approximately 247 cu ft although the entire volume is not available for crew activities.

Two hatches and transfer tunnels are provided. One hatch and transfer tunnel are located in the main cabin section beneath the main instrument panel and are used for crew egress and ingress to and from the lunar surface once the LEM is operationally deployed on the moon. The second hatch and tunnel are overhead and located in the midsection directly over the engine cover. They are used for transfer between the Apollo CM and the LEM ascent module.

Various equipment is stored within the LEM module and is located for rapid and convenient access. Life-support equipment displays and controls, and the food supply, are also located within the module. Various lunar mission equipment is transferred from the Apollo CM and SM to the LEM and returned to the CM prior to return to Earth.

Several modifications are required of the LEM cabin interior in order to facilitate the design and installation of equipment required for implementing the biomedical measurement program and to provide sufficient space for the required astronaut measurement activities. These modifications are identified and illustrated in Subsection 2.5.

2.5 LEM Ascent Stage (Minimum Modification)

The LEM ascent stage configuration is employed for Flights 211, 507, 509, 215, and 216. This configuration is identical to the lunar version and can be used as a backup vehicle to the Apollo Lunar Program. This constraint forces the adoption of a minimum modification program. Recent telecon discussions with Grumman representatives provided the following information regarding the Phase-I LEM Laboratory:

- The Phase-B contract with NASA-MSC to define a minimum modification program is underway and was scheduled for completion in late 1965.
- Modifications will probably be limited to those easily accomplished at Cape Kennedy.
- Engine covers in the LEM midsection can be removed.
- Life-support capability will be provided to the LEM from internal sources and from the Apollo CM/SM.

- Power for experiments will be provided by the addition of a power supply to the normal LEM subsystem.
- Holes and bracket attachments can be provided in the interior bulkhead structure for mounting of equipment and storage racks.

The minimum modification program has not been detailed; however, on the basis of LMSC Agena experience, this program would imply that no changes to major primary structure would be permitted. In addition, equipment could be removed only if it could be easily restored. Electrical circuitry, lighting, junction boxes, etc. would have to be used in the present state. Ascent propulsion system would have to be retained; however, easily removable units such as tankage and propulsion units, could be removed.

In the current LEM, the commander and systems engineer stand side by side in the main cabin section of the LEM during lunar descent. This cockpit area has been designed to assure maximum external visibility. The main instrument panel is centered between the astronauts to provide ease of control operation, and display interpretation and reading. The cabin ceiling height varies from 74.5 in. to 79.64 in., with the highest point at the cockpit centerline. The internal volume of the crew compartment is approximately 247 cu ft although all this volume is not available for crew activities. As noted in Fig. 2-3, LMSC recommends using the main cabin as the experimental area and the midsection as the location for the experiment station. This station provides the capability and working areas for microscopy, chemistry, biomedical, and behavioral experiments. In addition, there is space for displays of scientific and engineering experiments.

Two hatches and transfer tunnels are provided. One hatch and transfer tunnel are located in the main cabin section beneath the main instrument panel are used for crew egress and ingress to and from the lunar surface once the LEM is operationally deployed on the moon. This particular hatch and transfer tunnel would be utilized in EVA on the earth orbital missions. The second hatch and tunnel are overhead and located in the midsection directly over the engine cover. They are used for transfer between the Apollo CM and the LEM ascent module.

2.6 EXTENDED MISSION LEM LABORATORY

The LEM Laboratory is the basic configuration to be used with Flights 513, 221, 516, 518, 224, 521, 523, 229, and 230. The basic difference between the LEM Laboratory and the previously described LEM ascent stage is that the Laboratory contains the necessary subsystems to support a 45-day mission. Modifications are extensive on the LEM Laboratory and minimal for the Apollo CM/SM which will be used primarily for support. Modifications to the LEM for use in earth-orbital missions will provide 247 cu ft for use as a laboratory or living space.

2.7 SPACE ALLOCATION STUDY

2.7.1 General

The free volume within the AAP was analyzed in order to determine the space available for storage and location of biomedical equipment. In this connection, various allowable modifications, specific constraints, and design criteria imposed on the AAP systems design have significantly influenced available space in pressurized and non-pressurized areas. Allowable modifications have been presented in Subsection 2.5, while major constraints and criteria are as follows:

- Nonavailability of the forward G & N station area in the Apollo CM
- Lack of space for permanent installation of biomedical measurement equipment in the Apollo CM (storage available only for return-to-earth samples)
- Pressurized compartments in only the Apollo CM and the LEM Laboratory
- No usable airlock provided between LEM Laboratory and the CM after docking
- Allocation of one pie-shaped equipment compartment (unpressurized) in a sector of the Apollo SM for scientific experiments
- Provision of a degree of freedom for removing selected lunar mission equipment located within the LEM Laboratory to permit an increase in available internal Laboratory volume (circulation system, intercom system, lighting system, and main-cabin, system-management and instrument panel not removable)

In accordance with Grumman study results (Ref. 2) 247 cu ft of volume within the LEM ascent stage has been established as available for the LEM Laboratory. Several design drawings supplied to LMSC were utilized as the basic design configuration from which the detailed space allocation study was completed. The previously mentioned constraints and criteria represent, in addition to the drawings, the total body of design data and information used in the space allocation study.

2.7.2 Space Allocation in the LEM Laboratory

Various portions of the LEM Laboratory interior profile envelope have been designated as follows:

- Main Cabin. Area within LEM Laboratory which previously contained the main lunar descent display-control panel; presently includes viewing ports and egress/ingress forward tunnel and hatch.
- Midsection. Area within LEM Laboratory which is adjacent to the main cabin wherein the crew-transfer/docking tunnel and engine cover are presently incorporated.
- Right-Hand Compartment of Midsection. Bulkhead area on right side of LEM Laboratory (when looking toward the main cabin) which extends from the raised deck to the ceiling and forward to the aft tunnel.
- Left-Hand Compartment of Midsection. Bulkhead area on left side of LEM Laboratory cabin (when looking toward the main cabin) which extends from the raised deck to the ceiling and is forward of the aft tunnel.

Specific interior section design details are presented in Fig. 2-4. Equipment location and storage within the LEM Laboratory are suggested as follows:

- Biometric Station. Biomedical measurement equipment, including displays and controls, will be located at a console station in the midsection. Biomedical measurement sensors will be located on the astronaut; however, data will be transmitted to the main Biometric station and therein displayed, controlled, and/or recorded (or routed for magnetic tape recorder, etc.), will be stored in the left-hand compartment storage area.

- Human-Performance Station. Equipment for human-performance measurement will be located in a console station in the midsection. Equipment will be stowed in the left-hand compartment storage area which is not mountable on the console (e.g., oculometer, tapes, etc.).
- Micro-Chem Station. Equipment and supplies associated with microscopy and chemistry will be located in the right-hand compartment of the midsection. An extendable workshelf is located in the station layout to provide a maximum workspace area for equipment handling. Liquid and solid cold-storage units will be located in the left-hand compartment. Cold storage units should be so designed that they can be removed and relocated in the Apollo CM for return of the samples to earth.
- Left-hand Compartment of Midsection. This compartment will be utilized primarily for equipment and supply storage.

Volume capacities for each major interior section are presented in Table 2-1.

Table 2-1

SUMMARY OF INTERIOR VOLUME DISTRIBUTION IN LEM LABORATORY

Area	Length (In.)	Depth (In.)	Height (In.)	Volume (cu ft) Compartment	Volume (cu ft) Section
Midsection	58[a]	54[a]	61[a]	–	98
Biometric Station	30[b]	10[c]	30[a]	5.5	–
Human Performance Station	24[b]	10[c]	24[a]	3.3	–
Micro-Chem Station	16[a]	10[a]	28[a]	2.2	–
Left-Hand Compartment	16[a]	10[a]	50[a]	3.6	–
Main Cabin	92[a]	35[b]	79[a]	–	149
TOTAL				14.6	247

[a]Maximum
[b]Usable
[c]Without shelf

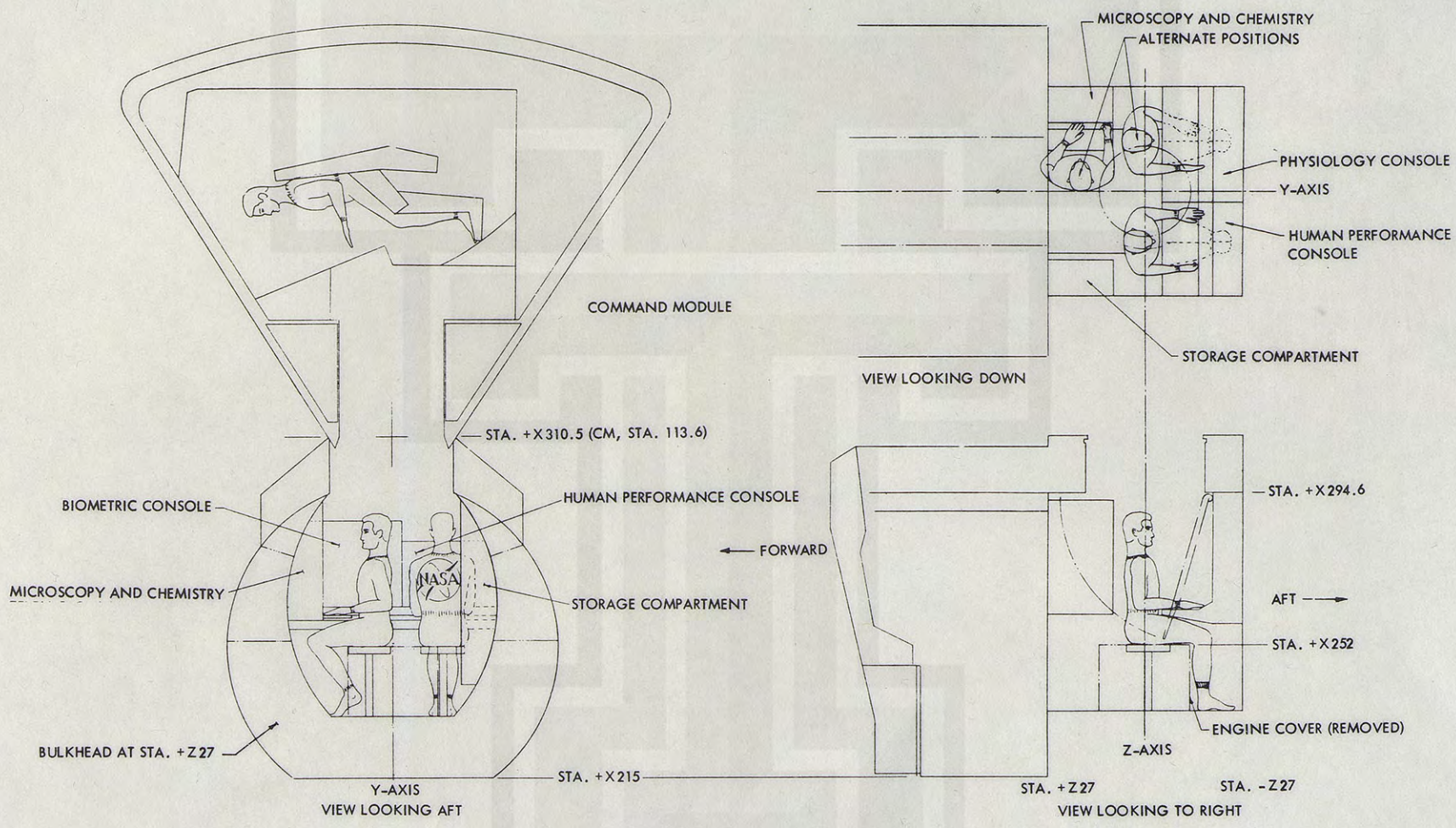

Fig. 2-4 Internal Cabin Arrangement for Biomedical/Behavioral Equipment in LEM Laboratory (Proposed Layout)

2.7.3 Interior Space Requirements of LEM Laboratory

During the space allocation study, it was determined that the main cabin console area did not advantageously lend itself to packaging, locating, or storing biomedical equipment and appeared more useful for nonbiomedical (e.g., scientific) activities and was, therefore, left available for any function of this character, as desired.

The following interior design requirements must be met in order to provide a sufficient volume (i.e., the minimum acceptable) for performance of the desired AAP Biomedical measurements and activities:

- Removal of the nonfunctional engine cover in the midsection
- Non-equipment interference with the required crew operating space indicated in Fig. 2-5
- Location of overhead hatch hinge shifted to opposite side of hatch

The proposed interior arrangement of the LEM Laboratory, incorporating the foregoing modifications, is shown in Fig. 2-5. This illustration also shows an air-pressure lock and transfer tunnel as part of the forward section hatch of the LEM Laboratory to facilitate EVA. This will permit the Apollo CM and the LEM Laboratory to remain pressurized at all times.

2.8 AAP MISSIONS AND FLIGHT CHARACTERISTICS

A total of 24 missions are currently being planned for the AAP Program. They vary in orbital altitude, inclination, and stay time. Six missions are concerned with the lunar surface-exploration aspect of the program. These missions are designed to extend the present Apollo capability with respect to both stay time and payload in order to allow comprehensive exploration. Three missions will be utilized for lunar orbital surveys and will provide lunar orbital stay-times of 4 to 28 days. These missions will have capability for performing remote sensing of the entire lunar surface.

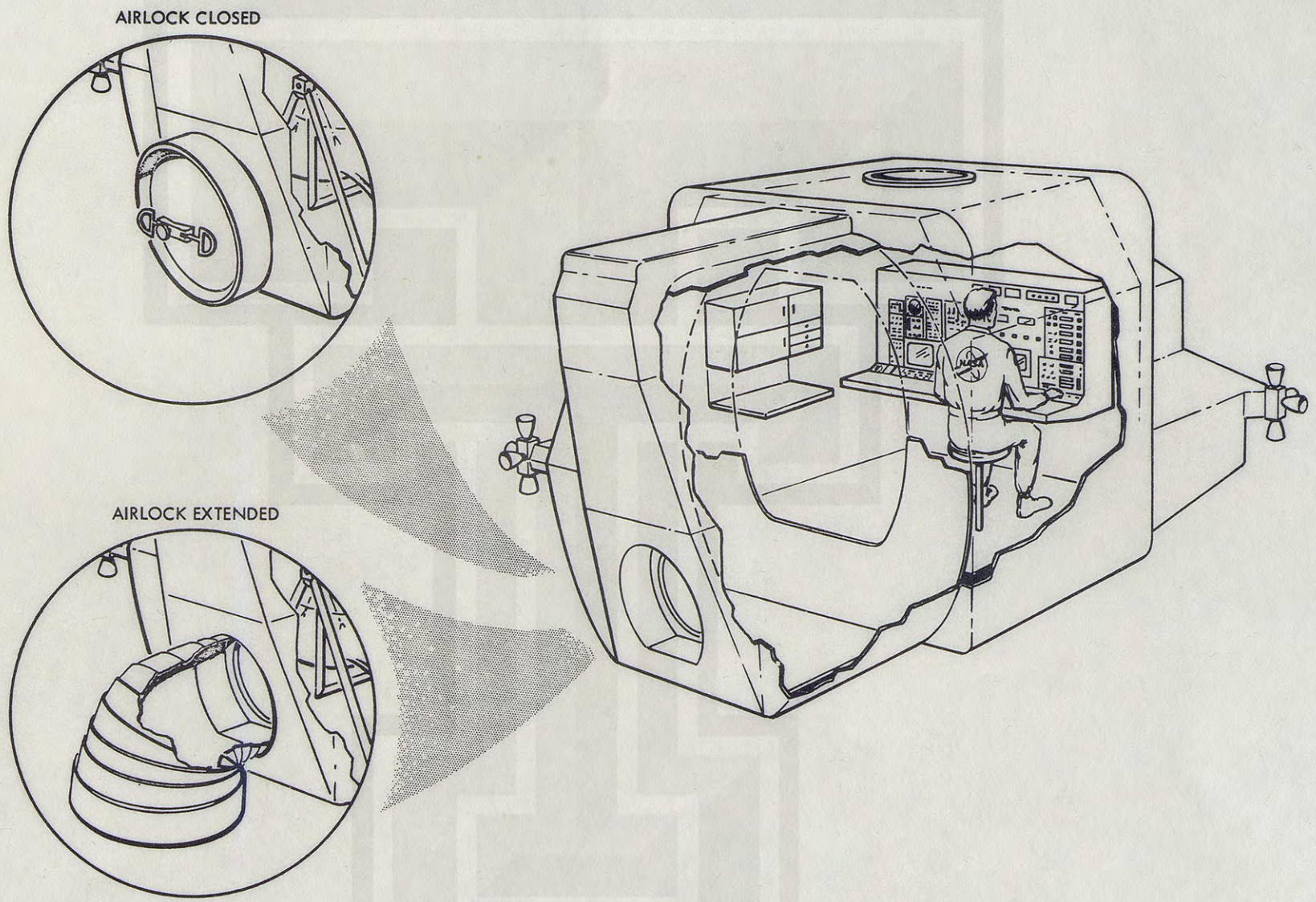

Fig. 2-5 Recommended EVA Hatch Airlock for AAP

The remaining 15 missions are extended earth-orbital flights and will be flown in earth orbit for durations of 14 to 135 days. They will provide a capability for extensive biomedical and scientific and engineering research. LMSC has defined the experiments and determined equipment requirements for these 15 missions.

Table 2-2 presents a summary of the 15 flights showing flight number, altitude, inclination, and mission duration data as provided to LMSC upon initiation of the study contract. Flights numbered in the 200 series employ the Saturn IB as the booster, while the 500-series flights employ the Saturn V. The 28-day mission is achieved by rendezvousing Flight 216 with Flight 215 after 14 days. The first 45-day mission will be accomplished with Flight 513. Doubling this mission duration will be accomplished by a rendezvous maneuver using Flights 518 and 224. A triple-rendezvous maneuver, employing Flights 523, 229, and 230, will establish a mission-duration capability of 135 days.

Table 2-2

AAP MISSIONS AND FLIGHT CHARACTERISTICS

Flight No.	Altitude (nm)	Inclination (deg)	Mission Duration (days)	Crew	Remarks
209	200	High	14	2–3	Apollo CM/SM – No LEM Ascent Stage
211	200	Low	14	3	Apollo CM/SM – LEM Ascent Stage (Min. Mod.)
507	200	90	14	3	Apollo CM/SM – LEM Ascent Stage (Min. Mod.)
509	19,350	Synchronous	14	2	Apollo CM/SM – LEM Ascent Stage (Min. Mod.)
215	200	Low	14	3	Apollo CM/SM – LEM Ascent Stage (Min. Mod.). (Rendezvous with following flight)
216	200	Low	14	3	Apollo CM/SM – LEM Ascent Stage (Min. Mod.). (Rendezvous with Flight 215-extends mission capability to 28 days)
513	200	83	45	3	LEM Lab
221	200	Low	45	3	LEM Lab
516	19,350	Synchronous	45	3	LEM Lab
518	200	Low	45	3	LEM Lab-rendezvous with Flight 224
224	200	Low	45	3	LEM Lab-extends mission capability to 90 days
521	200	90	45	3	LEM Lab-limited biomedical monitoring
523	200	Low	45	3	LEM Lab-rendezvous with Flight 229
229	200	Low	45	3	LEM Lab-rendezvous with Flight 230 – 90 days
230	200	Low	45	3	LEM Lab-after rendezvous with Flight 229, extends mission to 135 days

SYNOPSIS

This section describes the biomedical and behavioral experiments currently under consideration for the Apollo Applications Program. Each biomedical and behavioral experiment (0100 and 0200 series experiments, respectively) is briefly discussed and measurements are indicated for the majority of experiments.

Section 3
BIOMEDICAL AND BEHAVIORAL EXPERIMENT SYNOPSIS

3.1 BIOMEDICAL AND BEHAVIORAL EXPERIMENTS

The National Aeronautics and Space Administration (NASA) has formulated a list of biomedical and behavioral experiments which are being considered for the AAP Program. These experiments have been conceptually reviewed by the International Business Machines Corporation, Boeing, Grumman, and NAA. In addition, LMSC has participated in a NASA-Headquarters directed Biomedical and Human Performance Program Study (Ref. 1) that resulted in a recommended program and conceptual design of measurement systems for the planned NASA Orbital Research Laboratories. The present study has included a detailed review and analysis of the above studies and resulted in comprehensive experiment-equipment definition for the specified No. 0100 and 0200 experiments. This section summarizes the individual biomedical and behavioral experiments as identified by NASA-assigned experimental number. In general, Subsections 3.2 and 3.3 provide, respectively, definition of the biomedical experiments (Nos. 0101 through 0121) and the behavioral experiments (Nos. 0201 through 0203).

3.2 BIOMEDICAL EXPERIMENTS (0100 THROUGH 0121)

The biomedical experiments are intended to evaluate the effects of prolonged spaceflight on man and to enhance his operational efficiency so as to permit more extensive manned spaceflight missions. Twenty-one experimental measurement packages have been defined to analyze critical human functions and to focus on those most likely to be affected adversely by prolonged spaceflight. Procedures and instrumentation employed in the experimental packages are a composite of (1) standard medical techniques, updated and adapted to meet zero-g requirements, and (2) imminent additions to the prevailing state-of-the-art. These experiments should provide:

- Assessment of the effects of prolonged weightlessness on the physiological integrity of the astronaut
- Determination of the mechanisms that mediate observed changes
- Prediction of the onset and extent of degraded functioning
- Validation of countermeasures that may be necessary to support man's extended exploration of space

Following is a discussion of the purpose and scope of each biomedical experiment.*

Experiment 0101 – Assessment of Changes in Sensitivity of the Otolith Mechanism and Its Central Nervous System (CNS) Connections to Linear Accelerations as a Result of Prolonged Weightlessness. The sensitivity of the otolith mechanism and its CNS connections may increase as a result of the absence of linear acceleration of gravity. It is therefore desirable to measure the increase in such sensitivity and the extent to which false illusions can be operationally hazardous. The effects, if any, of weightlessness upon the function of the vestibular apparatus are of interest for the following reasons:

- Impaired function of these organs may cause a serious performance decrement during flight.
- Disuse and/or compensation may impair function dring or after reentry.
- If artificial gravity proves necessary for extended space flight, the function of the vestibular apparatus will strongly influence the design of the artificial-gravity device or station.

The following measurements or tests of the otolith mechanism and its CNS connections to be performed on-board the spacecraft during flight are typical:

- Oculogravic illusion for various positions of the head with respect to active force
- Somatic inversion and uprightness threshold
- Ocular counter-rolling under various g-loadings
- Visual performance test

*Consideration of the schedule relative to the effect of one experiment upon another is discussed in Sections 5 and 6.

- Bodily sensations (on-going voice-taped commentary)
- Susceptibility to malaise (objective and subjective)

All tests should be conducted on the first day, and then every other day during the flight and at approximately the same time each day. Since vestibulo-ocular reflexes will be used as indicators of inner ear function, it appears essential to monitor the tonicity of the extraocular muscles throughout the flight at the same time the vestibular testing (Experiment 0102) is performed. Lateral, vertical, and cyclophoric measurement can readily be made using the oculogravic test goggles mounted over one eye with the left eye cover extension removed. A small target can be painted on or attached to the wall of the cabin for this purpose. A preliminary study of adaptation effects should be made near the end of the flight with at least two subjects stimulated by constant rotation (about 10 rpm) for approximately 1 hr in lieu of their daily test schedule as previously mentioned.

Experiment 0102 – Effects of Rotation of the Head in Weightlessness and of a Rotating Vehicle on Semicircular Canal Functions. This experiment is designed to investigate oculogyral-coriolis illusions, i.e., the apparent change in position of an object in the visual field, produced by head movement during rotation. This experiment presents the first opportunity to conduct extensive evaluation of the tolerance of crew members in a rotating spacecraft (generally not recommended because of the operational considerations) or in a rotating device in which the results will be unbiased by the gravitational field. The results should yield design information for possible future rotating vehicles with regard to incidence of disorientation and tolerable rates of rotation. Typical of the measurements or tests, to be made on board the spacecraft, of the semicircular canal mechanism and its CNS connections are the following:

- Oculogyral illusion
- Coriolis illusion
- Nystagmography
- Bodily sensations (on-going voice-taped commentary)
- Susceptibility to malaise (objective and subjective)

All tests should be conducted the first day and then, if possible, every other day during the flight at approximately the same time each day. Since vestibulo-ocular reflexes will be used as indicators of inner ear function, it appears essential to monitor the tonicity of the extraocular muscles throughout the flight. Laterial, vertical and cyclophoria measurements can readily be made using the oculogravic test goggle mounted over one eye with the left eye cover extension removed. A small target can be painted on or attached to the wall of the cabin for this purpose. A preliminary study of adaptation effects upon the cupular-organs CNS connections should be made near the end of the flight with at least two subjects stimulated by constant rotation (about 10 rpm) for at least 1 hr and longer if possible. This testing would be in lieu of the astronaut's daily test schedule as previously mentioned.

Experiment 0103 – Response of Human Circulatory Dynamics to Provocative Testing During Prolonged Spaceflight. The major objective of this experiment is to determine the extent of functional circulatory changes occurring as a consequence of prolonged exposure to the spaceflight environment. A change in circulatory dynamics is expected to occur during adaption to null gravity during extended spaceflight.

On the basis of our present knowledge, this information is critically required in order to establish man's competence to endure prolonged exposure to null gravity and to devise and evaluate appropriate countermeasures to obviate any decremental functional changes in this vital body system.

Two techniques may be utilized to examine the effects of diminished and increased venous return which will provide data on circulatory dynamics in the weightless state. One technique utilizes a lower-body negative-pressure chamber which encases the lower body and permits the stepwise application of negative pressure to the lower limbs. By selecting proper cycling values, a complete pressure range may be examined. In the other technique, the effects of diminished venous return in individuals changing from the supine position to the upright position (usually seen at 1 g) will be reproduced by trapping significant volumes of blood in the lower extremities by means of venous

occlusion. The reverse situation of the response to increased venous return, noted when changing from an upright position to the supine position, will be elicited by using air-filled bladders to force blood from veins of the lower extremities and lower abdomen into the central venous reservoir. The time-course of changing response to these maneuvers should reflect alterations of blood volume, changes in distribution of blood volume, and changes in the performance of cardiovascular reflexes as they may occur under the influence of long-term weightlessness.

State-of-the-art procedures for the assessment of circulatory dynamics will be utilized, i.e., electrocardiogram, respiration rate, blood pressure, temperature, and clinical observation. In addition, cardiac output will be measured using the basic respiratory analyzer.

Experiment 0104 – Exercise (Work) Capacity and Circulatory Responses to Exercise During Prolonged Spaceflight. The major objective of this experiment is to determine the effect of prolonged null gravity on exercise or work tolerance (ergometry) and on circulatory dynamics (cardiac output, circulation time, and on the peripheral venous pressure in the steady immediate post-exercise state). Clinical observation will be assisted by using a photographic anthropometric technique. This experiment is basically a Masters Test for spaceflight application.

A properly implemented exercise regimen will preclude impairments in cardiac response from reaching unacceptable limits. For the measurement experiment, the cardiac response to a specific exercise load will be evaluated. Several levels of exercise will be pretested on the ground, so that the response of each astronaut is known for each level of exercise. The load will be calibrated and easily reproducible, and kept constant for each astronaut. The exercise should not involve maximum effort; however, it should be sufficient to evoke a response of heart rate or blood pressure or both. An electrocardiogram will be taken for continuous heart rate and rhythm, and blood pressure will be checked before and after exercise. A predetermined heart rate (such as 150/min) will be established, with the test results recorded as the time to reach the end-point. A time limit should also be set, e.g., 5 to 10 min.

Experiment 0105 – Changes in Blood Volume and Other Body-Fluid Compartment Volumes. Prolonged null gravity will occasion fluid and electrolyte shifts among the body compartments and affect circulating blood volume. These volumetric changes must be measured as the resulting data are critical in providing countermeasures for the orthostatic intolerance problem. Two major measurements are required to conduct this experiment, namely, lean body mass and plasma volume.

Long-term exposure to zero-g will result in loss of lean-body mass unless an exercise program is instituted to maintain body activity at a normal level and thereby prevent atrophy from disuse. A measured amount of tritium is ingested in water, and the bladder is emptied at that time. Urine is collected after 1 hr, and at intervals thereafter, until tritium levels in the urine equilibrate with body water tritium. The tritium level in urine permits a calculation of total body water. Lean-body mass has a constant water level of 73 percent, so the total body water divided by 0.73 gives an approximate lean-body mass. This method of measurement assumes normal body water. Edema or severe dehydration could introduce artifact, but these variables can be determined by other measures. Tritium and a scintillation counter will be used in this experiment.

Bed-rest, water immersion, and negative-pressure breathing cause diuresis, loss of sodium, and ultimately lowered blood volume. These effects have occurred in the first few days of bed-rest. Consequently, similar volume changes are expected in prolonged weightlessness. Plasma blood volume can be measured by injection of a known quantity of radio-iodinated serum albumen (RISA). The concentration of the RISA in a sample of blood drawn after 10 min allows the calculation of the amount of plasma necessary to dilute the known quantity to the observed amount. The hematocrit must also be determined for validity. As an alternate method, each astronaut can be bled, and some of his own red cells can be tagged with radioactive iron or chromium and then reinjected. Interval samples of blood from finger punctures can be counted.

Experiment 0106 – The Effect of Prolonged Spaceflight on Carotid Baroreceptor Reflexes and Arteriolar Reactivity. The objective of this experiment is to determine the effect

of prolonged existence in the spacecraft environment on cardiovascular reflexes. The most promising measurement candidate is the molded plastic neck cuff.

This type of cuff, allowing for positive and negative pressure in the cervical region, has been proposed as a countermeasure to cardiovascular deconditioning. This experiment will be directed primarily toward determining the geo-adaptive characteristics of the carotid sinus reflex.

Experiment 0107 – Alterations in Venous Compliance Resulting From Absence of Hydrostatic Pressure. The major objective of this experiment is to determine the alterations in venous compliance due to the absence of hydrostatic pressure loading during prolonged space flight missions. Bed-rest studies indicate the probable alteration of venous tone resulting from decreased hydrostatic load. It is assumed that this occurs during weightlessness and contributes to postflight orthostatic hypotension. Lower-limb compliance will be tested by a modification of the classical plethysmographic techniques. The apparatus will be placed on the lower limb and stepwise application of negative pressure (relative to ambient) will be made to change the transmural venous pressure.

Experiment 0108 – Evaluation of Countermeasures to Prevent Circulatory Reflex Changes Occasioned by Prolonged Exposure to Null Gravity. It has been reported that a combination of uncompensated weightlessness, confinement, and inactivity produces physiological effects unique to space flight. The confirmed effects of weightlessness are outwardly manifested by (1) a decreased tolerance to the erect posture upon return to earth, and (2) a general deconditioning manifested by lowered muscular strength and endurance.

An active program is under way to develop prototype equipment designed to evaluate and control, through elimination or reduction to tolerable limits, the physiological adaptive changes hypothesized to result from extended spaceflight. Evaluation of the effectiveness of this prototype equipment is the purpose of this experiment.

Experiment 0109 – Assessment of the Effects of Prolonged Spaceflight on Pulmonary Function. The major purpose of this experiment is to measure pulmonary capacities and lung volumes periodically in order to evaluate changes and detect trends in relationship to the combined stresses of spaceflight, especially the potential pulmonogenic effect of trace contaminants in an artificial atmosphere.

Absence of the gravity field will alter the position of the diaphragm because of a shift in the abdominal organs. In addition, a shift of blood volume may affect pulmonary function, and the decreased metabolic demand will affect respiration. Artificial respiratory atmospheres of reduced total pressure and inert gas pressures may result in atelectasis and pulmonary edema. The lack of gravity can result in pooling of blood in the thorax. The functioning of the diaphragm, thoracic, and abdominal muscles also may be altered as a result of weightlessness. Each of these factors can cause a reduction in the ability to move air in and out of the lungs. A strain-gauge flow transducer in a face mask or mouthpiece will transduce air flow rates to digital outputs. These outputs will be integrated for volume determinations.

Experiment 0110 – Determination of the Effects of Prolonged Spaceflight on Ventilatory Gas Exchange. The major objective of this experiment is to measure changes and identify trends by periodically determining the status of ventilatory gas exchange during prolonged spaceflight. It has been predicted that gross and subtle changes will occur due to the altered environment in the space vehicle.

Periodic measurement of concentration of O_2 and CO_2 in inspired and expired atmosphere is required. This involves collection and identification of appropriate gas samples, followed by in-flight determination of gas concentration. The respiratory analyzer used on Experiment 0109 will be utilized during this experiment. In addition, an ear oximeter can be used for indirect assessment of arteriolar hemoglobin saturation by O_2.

Experiment 0111 – Evaluation of Muscle Mass and Strength in Relationship to Confinement and Weightlessness. The objectives of this experiment are to determine the effects prolonged weightlessness and confinement have on the muscular system, to

quantitate these effects, and to develop corrective measures that will enable the astronauts to maintain normal muscle strength and tone. Muscle power (strength) will be measured on the ergometer. Muscle size can be measured by taking grid-photographs at selected body locations. Gross changes will be apparent on inspection. Further, the creatine/creatinine ratio in urine will indicate changes in the status to total muscle mass since a large amount of creatine appears in the urine when the total muscle mass decreases, provided there is no interference with liver function. Although the creatine/creatinine ratio is not an accurate index, this measure will serve as a cross-check. The on-board physician will be the subject of this experiment; however, the body weight of all three crewmen will be determined as a phase of the experiment.

Experiment 0112 – Study of Mineral Metabolism in Man During Prolonged Spaceflight. Prolonged spaceflight may induce important changes in mineral metabolism as a consequence of weightlessness and physical inactivity. This experiment is designed to determine and quantitate deleterious effects of spaceflight, if any, on mineral metabolism and to develop corrective measures in order to maintain normal mineral balance.

Determinations will be performed with respect to the following elements:

- Sodium
- Potassium
- Chlorides
- Phosphates
- Calcium
- Magnesium
- Manganese
- Zinc
- Sulfates
- 17-Hydroxy Corticosteroids
- Bone Density Measurement – (Made once weekly with the Os calcis and fifth digit of either hand to be measured)
- Bircarbonate
- Mucoproteins
- Alkaline Phosphatase

Bone density measurements will be made, using a differential X-ray absorption bone densitometer. This instrument consists of a pair of radioisotope sources, a pair of matched radiation monitors, calibration absorption wedges, and associated electronics and holders.

Experiment 0113 – Assessment of Nutritional Status of Man During Prolonged Spaceflight. Prolonged spaceflight may induce nutritional changes sufficiently significant to influence the logistics of future planning. This experiment is designed to determine and quantitate the nutritional adequacy of operational rations and to develop corrective dietary measures to maintain physiologic integrity and normal function during prolonged manned spaceflight missions. Changes in general metabolism and metabolic cost of living under conditions of extended spaceflight, and identification of changes in carbohydrate, fat, and protein metabolism and water balance will be investigated.

Preflight and postflight measurement of the flight crew will be made to serve as controls. Determinations to be made on inflight-collected specimens are:

- Blood lactic acid
- Serum proteins
- Glucose tolerance
- Fat tolerance
- Creatinine
- Bilirubin
- Uric acid
- Amino acid nitrogen
- Total nitrogen
- NPN
- BUN

Experiment 0114 – Gastrointestinal Motility and pH. The endoradiosonde (radio pill promises to be a useful technique in determining the effects of weightlessness on gastric secretion and gastrointestinal motility as related to nutrition and predisposition to peptic pathology. Information on such aspects as equipment performance, reliability

and response linearity is still meager, although development of this detection tool is being actively pursued by several investigators.

The endoradiosonde is about the same general size as a pharmaceutical capsule and is suitable for swallowing. As the pill progresses through the alimentary tract, it telemeters information from the stomach, pylorus, duodenum, small intestine, and large intestine before being excreted in the feces. The estimated overall size ranges from minimum dimensions of 15mm length by 5 mm diameter, to a maximum size of 22mm length by 8mm diameter. The estimated weight for the pill is about 2.5 gm.

Experiment 0115 – Study of Thermal Regulation in Man During Prolonged Spaceflight. The major objective of this experiment is to determine and evaluate any important changes in thermal regulation as a consequence of endocrine, metabolic, and vascular factors. The determination and quantitative evaluation of deleterious effects on the thermal regulatory system will permit development of corrective measures in order to maintain normal temperature regulation.

Measurements must be taken to determine changes in comfort index for varying thermal loads as well as to determine changes in blood flow in response to changes in skin temperature brought about by administering the thermal stress test. Evaluation of body thermal loads will be performed as an effective countermeasure and as a correction for orthostatic intolerance. Deep body temperature measurement, using an ear-canal thermistor will be determined weekly. A telethermometer, a harness with 12 thermistors, a water-cooled, temperature-controlled, inner garment (Apollo inner garment and Apollo backpack) and the LBNP device are required to evaluate the effects.

Experiment 0116 – Application of Water-Cooled Suit to Astronaut Thermoregulation During Intravehicular Temperature Variations in Spaceflight. This experiment has been deleted from this study by NASA direction.

Experiment 0117 – Effects of Spaceflight on Human Neuroendocrine Function. Prolonged spaceflight may induce an adverse effect on the human neuroendocrine function

due to the possibility of general cellular change. This experiment is designed to sample various endocrine and neuroendocrine functions in order to determine and quantitate the occurrence of possible changes and to provide insight, along with other biomedical data, into the mechanisms involved. This will have a direct bearing on the determination of the feasibility of longer-duration manned spaceflight missions.

Determinations to be made on inflight-collected specimens are:

- Protein-bound iodine (PBI)
- 17-ketosteroids
- Cathecholamines
- Calcium
- Phosphate
- Urine specific gravity
- Urinary proteins
- Urine pH
- 17-hydroxy corticosteroids

Sperm count and motility determinations may be performed both preflight and postflight.

Experiment 0118 – Dynamics of Human Hemic Cell Proliferation, Distribution, and Destruction Under Conditions of Prolonged Spaceflight. Prolonged spaceflight may cause significant changes in the genetics, production, distribution, or destruction pattern of hemic cells in humans. There is a possibility of development of altered cellular genetics in weightlessness, aggravated by the effects of the artificial gaseous atmosphere, radiation, toxic substances, and microorganisms. This experiment is designed to detect hematological cellular changes and to determine cause and effect relationships by the correlation of significant findings with environmental and systems monitoring data.

Crew members will serve as their own controls. Determinations to be made on inflight-collected specimens are:

- Hematocrit
- Reticulocyte count
- RBC (total) and red cell mass calculations
- RBC survival
- Hemoglobin
- WBC (total)
- Microscopic examination of stained blood smear for differential count and cell morphology
- Platelet count

Experiment 0119 – Human Hematological Defenses in Prolonged Spaceflight. The major objective of this experiment is to assess changes in the human immunological system and leukocyte function under prolonged weightlessness. The possibility of changes in cellular genetics in prolonged weightless flight poses the question of the occurrence of manifestations in rapidly proliferating cells and their products. Such cells are blood leukocytes and other cells of the reticulo-endothelial system. Their products are immune bodies. Leukocytes and immune bodies together form a critical body defense against infection.

The following measurements will be taken:

- Determine phagocytic action of leukocytes, their number, and their types from drawn blood which has been centrifuged to separate the WBC's
- Preserve blood samples for postflight examinations

Observation of leucocytic activity and numbers will be accomplished by telemicroscopic examination.

Experiment 0120 – Hemostasis. The major objective of this experiment is to determine blood coagulation and hemostasis parameters in the spacecraft environment. It can be expected that weightlessness will affect vascular perfusion and venous return, and fundamental hemostatic processes therefore will be studied.

Hematological determinations to be made on inflight-collected specimens are:

- Coagulation time
- Bleeding time
- Platelet count
- Clot retraction time

Blood samples will be preserved for the following postflight tests:

- Fibrinogen concentration
- Fibrinolytic activity
- Prothrombin activity
- Antihemophilic globulin (AHG)
- Plasma thromboplastin component activity (PTC)

Experiment 0121 – Microbiological Evaluations (Nose, Mouth, Throat, Skin, and Gastrointestinal Tract). The major objective of this experiment is to determine the microorganisms indigenous to man under actual spaceflight conditions, expecially during long-term spaceflight.

Measurements will be made to determine which of the indigenous microorganisms become dominant and whether these microorganisms are pathogenic or potentially pathogenic. Appropriate preventive and therapeutic measures will be developed as a result of this investigation.

Regular microbiological techniques will be used for collection, swabbing, streaking, plating, incubation, staining, and identification. These will require appropriate microscopic equipment, growth media, an incubator, a refrigerator, and bacteriological materials.

Microbiological specimens from designated body areas are streaked on the pre-poured nutrient agar and/or blood agar plates and incubated at 37°C for 24 to 48 hr. The conspicuous predominating bacteria colonies will be classified and recorded. The organisms from these colonies will be prepared on slides, stained with the Gram

stain technique and identified under microscope. The suspicious and/or predominating bacterial types can be stored in the refrigerator until the completion of orbital flight. The biochemical reaction tests and immunological tests can be carried out at ground laboratories.

The bacterial flora of the intestine can be determined in earth laboratories with fecal samples obtained preflight, postflight, and during the terminal portion of the flight.

3.3 BEHAVIORAL EXPERIMENTS (0201 THROUGH 0203)

The objectives of the behavioral experiments are to evaluate the effects of prolonged spaceflight on man and to enhance his operational efficiency so as to permit more extensive manned spaceflight missions. Three experimental measurement packages have been defined to analyze critical human functions and to focus on those most likely to be affected adversely by prolonged space flight. Procedures and instrumentation employed in the experimental packages are a composite of (1) standard behavioral measurement techniques, up-dated and adapted to zero-g requirements, and (2) imminent additions to the prevailing state-of-the-art. These experiments should provide:

- Assessment of the effects of prolonged weightlessness on the psychological performance capabilities of the astronaut
- Prediction of the onset and extent of degraded functioning
- A correlative index to physiological status

The objectives and descriptions for each behavioral experiment are presented in the following paragraphs.

<u>Experiment 0201 – Astronaut In-flight Performance (Continuous Survey of Flight-Crew Sensory and Perceptual Processes).</u> The objective of this experiment is to determine the relationships between crew physiological condition and performance and to detect changes in man's capability to perform mission tasks that will have an effect on the

development and validation of operational procedures, space system design, training procedures, and selection criteria. Visual acuity, depth perception, form discrimination, brightness measurements, and phoria, and auditory intensity and pitch thresholds will be determined. Linear and angular movement detection thresholds, and body position thresholds will be tested and measured in Experiments 0101 and 0102, while limb position sensation will be determined in numerous whole-body participation activities.

Experiment 0202 – Astronaut In-Flight Performance (Continuous Survey of Flight-Crew Psychomotor Function Processes). The objective of this experiment is to determine the thresholds, extent of range, explicit functioning, and levels of response. Parameters to be tested and measured are gross and fine motor skills and continuous and discrete processes. Locomotion and dexterity will be measured for gross motor skills, and manipulation and steadiness for fine motor skills. Pursuit and compensatory tracking will be tested and measured for continuous processes while simple and complex reaction, in addition to complex sequences, will be tested for discrete processes. Recorded observations of performance time-and-motion efficiency during whole body movement within the spacecraft, and while donning and doffing the pressure suit, will be made. Errors, over prescribed times, and time scores will be noted for all measurements conducted.

Experiment 0203 – Astronaut In-Flight Performance (Continuous Survey of Flight-Crew Higher Mental Processes). This experiment is designed to determine the extent, range, and complexity of crewman cognitive process for higher order mental tasks. These measurements should simulate operational-like tasks wherever possible and reinforce operational behavior when practical. Considerable crew "high face validity" should be considered when designing experiment equipment in order to gain crew acceptance and trust in the experiment and the benefits to result from its application. Vigilance, attention, problem-solving, memory, speech perception, reading, and time estimation are integral elements of the experiment.

SYNOPSIS

This section presents the technical approach applied to the execution of the study program. The methodology utilized in the development of the biomedical and behavioral experiment procedures is presented in addition to the criteria applied in the review process. Design and fabrication of the LEM Laboratory mockup is discussed and the configuration layout shown. The preparation and methodology employed in conducting the time-line testing and feasibility analysis are described, and examples of the data collection techniques are presented.

Section 4
PROGRAM TECHNICAL APPROACH

4.1 GENERAL CONSIDERATIONS

The considerable research which has been performed on man's responses and adjustment to the terrestrial environment has produced a reasonable understanding of his relationship with the earth environment. However, the complexities of man's relationship to space are not well defined and many significant aspects are still unknown, e.g., the degree of psycho-physiological dependence upon the maintenance of a gravitational field during extended space flights and the regulation and adaptation of certain body functions during such flights. Accordingly, a major objective of the NASA ORL program is to determine whether or not astronauts will require artificial gravity on long-duration spaceflights. As a basis for this decision, NASA will conduct a series of experiments on the effect of orbital spaceflight environmental conditions on man. It is therefore necessary to know first the range of measurements that are technically feasible within the vehicular constraints of each ORL. Such information is essential to the formulation of an experimental program that will assure valid observations.

Under the Biolabs Study (Ref. 1-1), LMSC identified and recommended a list of biomedical and human-performance measurements that appear to be technically feasible for the respective ORL's. Estimates of time and reliability were made for each measurement, although it is recognized that these estimates, based on the pooled judgments of experts, may be erroneous. Many factors for which empirical determinations were not made could appreciably influence the actual time needed to administer the measurements called for by each experiment. These factors include (1) design approaches still in the conceptual stage; (2) expertness of the analyst; (3) the vehicular constraints of restricted power, weight, and volume; (4) the operational constraints of limited time for experimentation; and (5) the zero-gravity environment. Factors 3 and 4 appear

to transcend the others in importance because the limitations in base-line data make extrapolation to the inflight experimental situation highly tenuous.

These influencing factors must be established well in advance of the system operation since the degree of success of the manned AAP experiment program may well depend upon the validity of the time estimates for conducting experimentation. Four methods by which such estimates may be obtained, in ascending order of accuracy, are: library and expert opinion, clinical laboratory study, simulation, and inflight experimentation.

Certain considerations must be weighed with respect to the foregoing methods. The value of expert opinion rests upon the specific applicability of the exercise upon which the judgment is based. Unfortunately, there is insufficient related experience from which to obtain, with any degree of confidence, general guidance for establishing the inflight experimental setting. The clinical laboratory approach (routine bench type instrumentation and facilities) is an improvement over expert judgment in determining the time estimates but limited by the lack of zero-gravity effects and vehicular constraints.

Data from earthbound laboratory simulation can be accurate and useful. Its applicability is a function of simulation fidelity, i.e., the degree to which the simulated environment or condition faithfully reproduces actual operating circumstances. The extent of such fidelity is constrained in turn by physical limits, safety requirements, and economic considerations. Further, there is a determinable cross-over point in simulation development where costs outweigh the advantages of achieving greater fidelity.

The degree of fidelity of simulation desired is determined by the criticality of results to be obtained, the value and potential application of the results obtained, and the extent of firmness of the system design to be simulated. In the evaluation of conceptual systems, therefore, simulation is of greatest value when conducted in parallel with the system development and by orderly and progressively more complex stages.

The first stage of simulation thus may be a simple, inexpensive model of mockup which is, in effect, a three-dimensional engineering drawing that permits a preliminary evaluation of man-machine relationships. This was the stage reached during the LMSC Biolabs Study.

The second stage of simulation calls for a more durable mockup to provide opportunity for evaluating operator procedures systematically, establishing task times, and revealing conceptual man-machine design aspects requiring improvement. For the AAP study, a semihard mockup of the LEM Laboratory and of certain of the biomedical and human performance equipment was constructed in accordance with the AAP vehicle/system constraints. Tests were performed with subject personnel to achieve the objectives of establishing initial gross estimates of required experiment time, and in determining the feasibility of conducting the experiments in the Laboratory.

4.2 SUMMARY OF TECHNICAL TASKS

The work performed was divided into the six following major subtasks:

- Prepare detailed space applicable experiment procedures for the 0100 and 0200 biomedical and behavioral experiments.
- Design and construct a "semi-hard" AES LEM Ascent Stage laboratory mockup.
- Conduct time-line tests and feasibility analyses of specified experiments.
- Establish grouping and ordering of experiments based on technical feasibility, equipment utilization, medical objectives, and total measurement time.
- Define experiment equipment characteristics, development schedules and costs.
- Develop a recommended experimental design, analysis, and development program for a future study.

The foregoing tasks are discussed in Subsections 4.3 through 4.6.

4.3 PROCEDURE DEVELOPMENT FOR BIOMEDICAL AND BEHAVIORAL EXPERIMENTS

The NASA-specified experiments were reviewed and consultant personnel were assigned to the appropriate series of experiments in order to begin the task of experiment procedure development. Before initiation of the procedure development, consultant personnel were assembled for a general orientation session and the following ground rules were established for each procedure:

- Must meet the NASA-stated biomedical objective
- Must be medically safe and exhibit good clinical or experimental technique
- Likely to be conducted within the crew compartment of the LEM laboratory
- Equipment as specified by NASA not mandatory and subject to modification of type, number, and function (or deleted) as appropriate.
- To be defined only as far as the task level
- Written initially for on-earth accomplishment and modifiable for space application
- Reviewed in detail by qualified experts in pertinent field. (Any questions or problems will be jointly resolved by the study leader, the author of the experiment procedure, and the reviewing expert.)

Experiments were broken down into four major categories in order to facilitate the assignment to the various consultant personnel. These categories are as follows:

- Microscopy and chemistry
- Physiology
- Behavioral
- Radiation and vestibular

Experiment procedures were subsequently prepared (Table 4-1) and reviewed the first month of the study. During the time-line tests, however, several inconsistencies, problem areas, and mistakes were noted. Whenever possible, these difficulties were corrected and the procedures presented in this volume reflect the updating effort.

Table 4-1

REPRESENTATIVE EXPERIMENT PROCEDURE

Measurement/Experiment Identification		AES Station	Major Equipment	Support Equipment and Personnel
0202	Astronaut In-Flight Performance: Psychomotor; Continuous Processes (Pursuit Tracking)	Biometric Station	Human Performance Console	Computer 1 Crewman

Test Analyst:	R. B. Jones	Time of Run:	5 min and 43 sec
Subject:	R. B. Smith	Run No:	0202

Action		Action Feedback	Time	Frequency	Malfunction or Error	Remarks
Crew Man	Pursuit Tracking	CRT Image	7 Minutes (Estimated)	Continuous Task	Anticipated Procedural Error	
C	1. Seats himself and attaches restraint strap	Seated comfortably and secured properly	42 sec	Once	None	Restraint strap clumsy to use (suggest quick connect-disconnect type)
C	2. Removes instruction guide, selects pursuit tracking computer input program		37 sec	Once	None	None
C	3. Enters computer program via input keyboard	Keyboard computer check indicator lamp illuminates when correct input received and verified	53 sec	Twice	Crewman depressed a wrong input key: had to clear keyboard and repeat	Crewman nervous: his first task of the day
C	4. Turns on CRT and adjusts CRT brightness-contrast	Operating CRT; satisfactory brightness/contrast	20 sec	Once	None	None
C	5. Activates "joy" stick	Total movement of "joy" stick	9 sec	Once	None	None
C	6. Tracks CRT presentation with "joy" stick to check system	Tracking image on CRT checks with "joy" stick movement	35 sec	Once	None	None
C	7. Activates task timer (coupled to computer)	Timer indicator lamp illuminates and tracking task is initiated	8 sec	Once	None	None
C	8. Begins pursuit tracking task	Continuous tracking image on CRT	120 sec	Once	None	Overhead ambient illumination too bright (tendency to wash-out CRT presentation) Suggest-change plane angle of CRT window; mask CRT; relocate overhead lights; provide baffle for overhead lights (any, all, or combination of above should resolve problem)
C	9. Terminates task when timer signal sounds	CRT image changes to test pattern	1 sec	Once	None	None
C	10. Deactivates CRT	CRT image goes blank	2 sec	Once	None	None
C	11. Deactivates "joy" stick by placing in lock mode	"Joy" stick is inoperable	3 sec	Once	None	None
C	12. Deactivates timer	Timer switch is returned to zero status	3 sec	Once	None	None
C	13. Returns instruction guide to storage area	Human Performance Console is "shut down" and clear	10 sec	Once	None	None
		TOTAL	5 min and 43 sec			

After the initial set of individual experiment procedures was developed, each experiment was carefully analyzed to determine if it could be integrated profitably and justifiably with another experiment. Examples of the review criteria utilized in this process are as follows:

- Is it medically logical and significant to combine the experiment with another?
- Do the experiments utilize identical equipment?
- Are the experiment procedures similar?
- Is it practical to combine the experiment with one or more other experiments (e.g., with respect to such aspects as operating volume, time, set-up and tear-down of equipment, simple equipment interface, or lack of procedural complexity)?
- Can the experiments, when combined, be conducted by anyone other than a highly trained medical individual?
- Do the combined experiments utilize equipment that may not be flight-qualified in time for flight use?
- Does the combination reflect greater versatility in experiment flexibility or does it limit this characteristic?
- Is it likely that that experiment may be eliminated from the program?
- Is it likely that the desired information may soon be available from other sources, thus leading to possible elimination of the experiment from subsequent flights?

After considerable analysis and review along the foregoing lines, and on the basis of resolving, to the maximum possible degree, the major technical problems involved, integration of certain experiments was effected.

The experiment procedures developed to date are very preliminary and should be reviewed in detail by the cognizant NASA-designated principal experiment investigator. However, the procedures were quite adequate for this study and represent a significant step in the development of the biomedical and behavioral experiment program.

4.4 DEVELOPMENT OF AAP LEM LABORATORY MOCKUP

4.4.1 General

The initial activity involved in the design and construction of the LEM Laboratory mockup was a detailed review of Grumman data (Ref. 4-2) and, in particular, the engineering drawing layouts of the LEM. After this intensive review, general engineering drawings were prepared for utilization in the construction of the mockup. It was designed and constructed to represent, as closely as possible, the pressurized cabin area of the LEM Laboratory to ensure maximum fidelity of the operating envelope for conducting the study. Figure 4-1 is an actual photograph of the exterior of the mockup used in this study. The interior cabin envelope is identical to laboratory main cabin and midsection areas in both volume and design configuration.

4.4.2 Mockup Design Construction and Design Configuration

The mockup was constructed chiefly of sheet plywood and wood stringers to ensure sufficient strength for supporting the installation of equipment or instruments and personnel weight within the cabin area. Figures 4-2 and 4-3 present general overall design configuration drawings of the mockup and indicate the physical location of the biometric (biomedical and behavioral) and microscopy/chemistry work stations within the mockup.

The LEM Laboratory encompasses two major compartment areas – a main cabin and a midsection which are in the pressurized portion of the Laboratory. The main cabin contains the main astronaut vehicle control station display/control panel, external viewing ports, and egress/ingress hatch, all located forward of Sta. Z +27. The midsection is adjacent to the main cabin at the point (Sta. Z +27) where the crew-transfer/docking tunnel to the command module and the engine cover are located in in the unmodified LEM ascent stage.

During the design of the mockup, it became evident that a means of easy entry and exit was required for the subjects and other personnel; for equipment installation, servicing, and removal; and to enable observer personnel to view activities during the

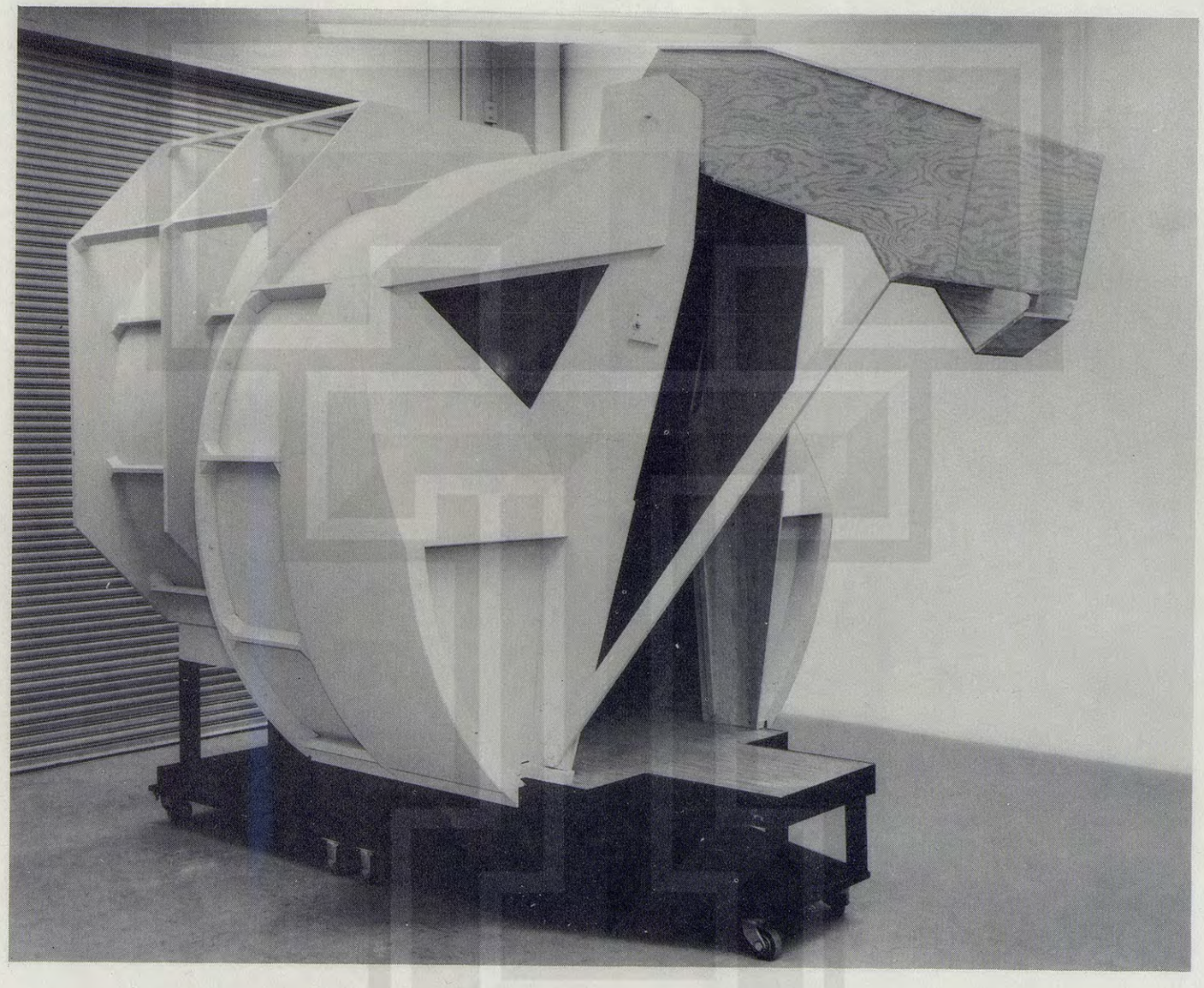

Fig. 4-1 LEM Laboratory Mockup

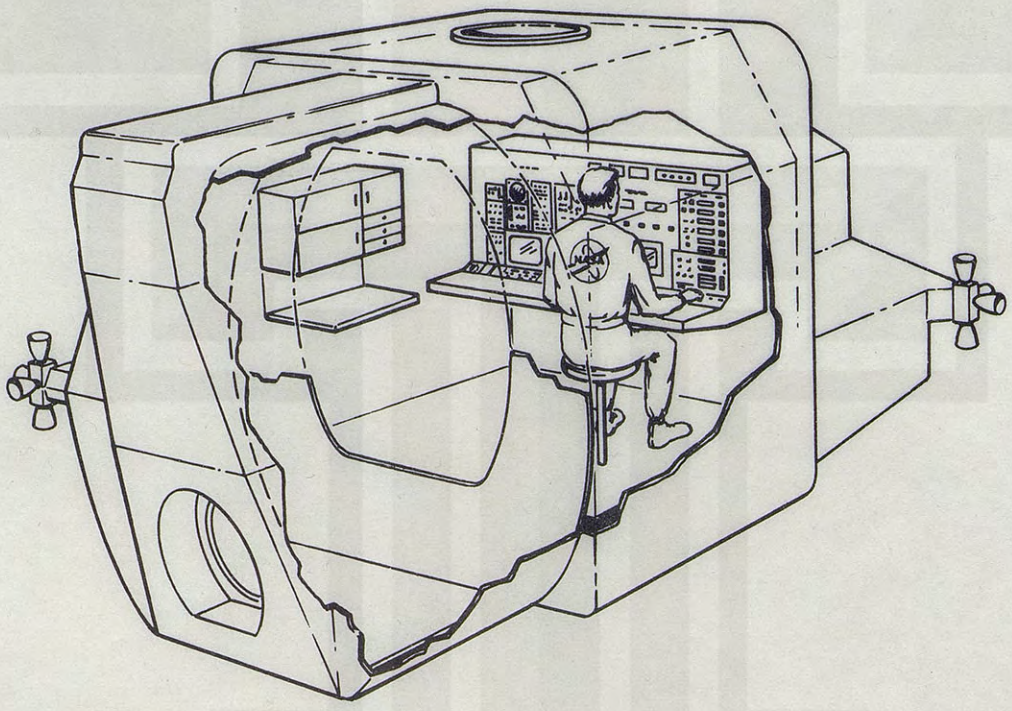

Fig. 4-2 General AAP LEM Laboratory Configuration

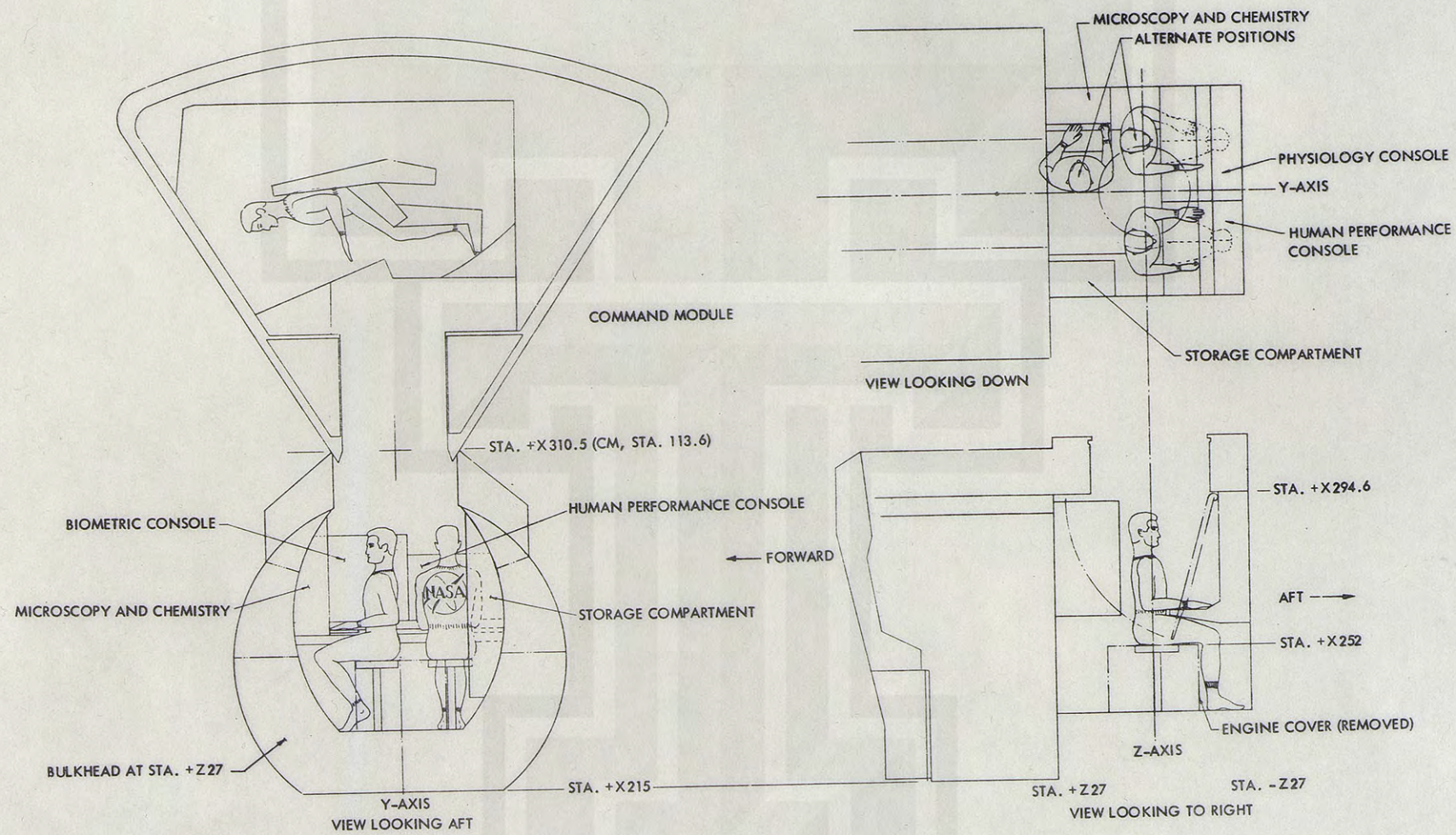

Fig. 4-3 Proposed AAP LEM Laboratory Biomedical/Behavioral Experiment Station Arrangements

time-line test. The original approach consisted of constructing the mockup in two halves (separated at Sta. Z + 27) with each half on casters to facilitate separation of the mockup. However, this approach did not provide for maintaining the actual volume constraints necessary to a valid simulation of the inflight situation. It was therefore decided to construct a removable forward hatch, and to hinge the "nose" of the Laboratory so that it could be easily raised or lowered into correct position. Figure 4-1 is a photograph of the mockup with the hatch removed and the forward "nose" section in a raised position. Figures 4-4 and 4-5 illustrate internal views of the laboratory mockup with the hatch and nose section positioned out of the way. It was verified during the initial time-line testing and feasibility analysis that this approach did not compromise the laboratory volume constraints and yet provided the time-line analyst with a maximum area for view of the experiments while they were being conducted in the cabin area. This construction approach also permitted easy installation of equipment and mockups and enabled personnel ingress and egress with minimum difficulty.

The portion of the LEM ascent stage containing support equipment, propulsion, and specific lunar equipment was eliminated from the mockup configuration since it was not required within the scope of the study effort.

4.5 PREPARATION FOR THE TIME-LINE TESTING AND FEASIBILITY ANALYSES

4.5.1 Test Scheduling

It was necessary to establish a formalized schedule for conducting the experiment tests in order to minimize personnel time and support requirements. This effort was accomplished through a review of the experiment procedures previously developed and an analysis of required equipment which was immediately available to support the experiment. In addition, it was necessary to provide sufficient time for the subject and experimenter to read and review each experiment procedure prior to the initiation of each test.

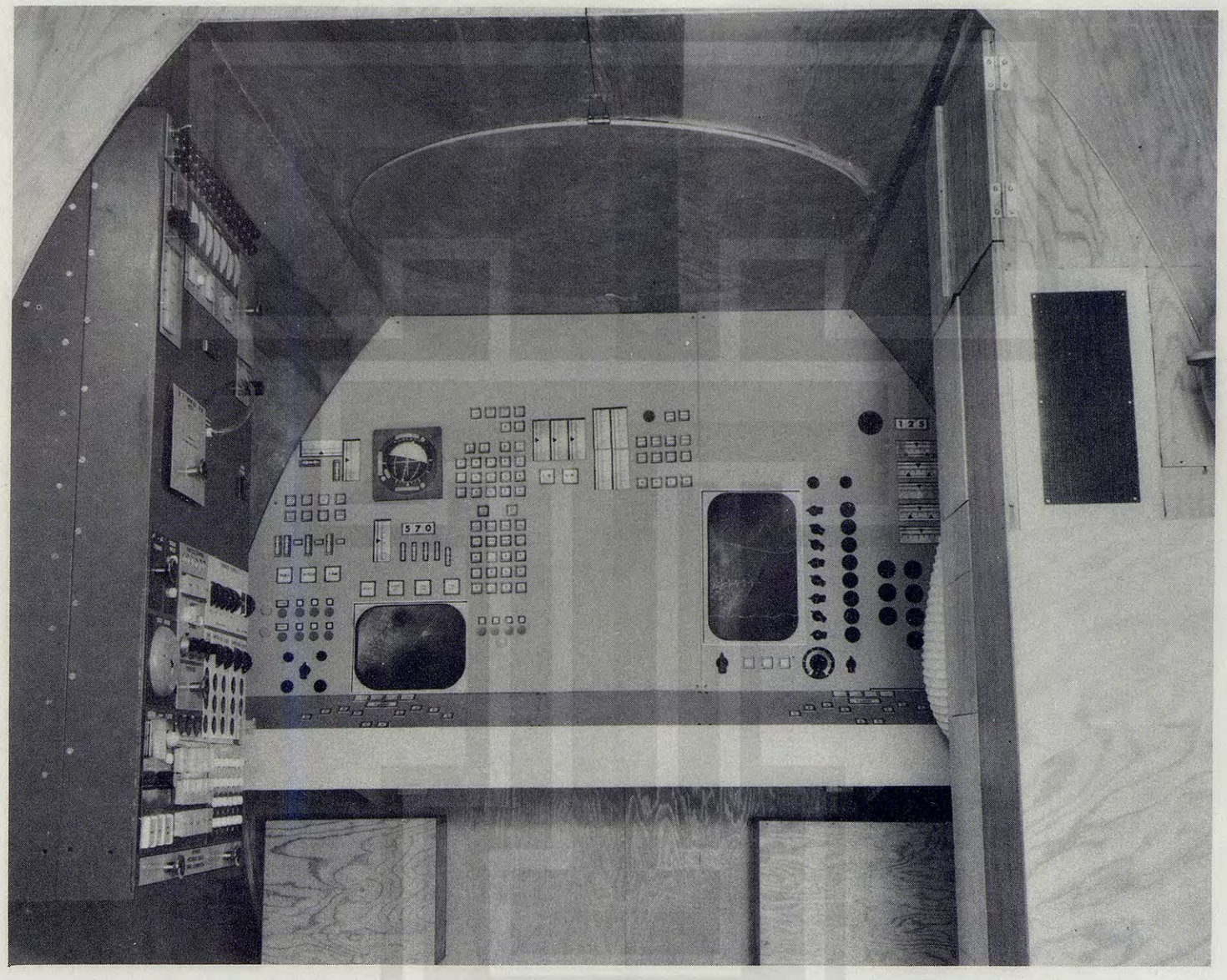

Fig. 4-4 Internal View of LEM Laboratory Mockup (View Aft in Midsection Area)

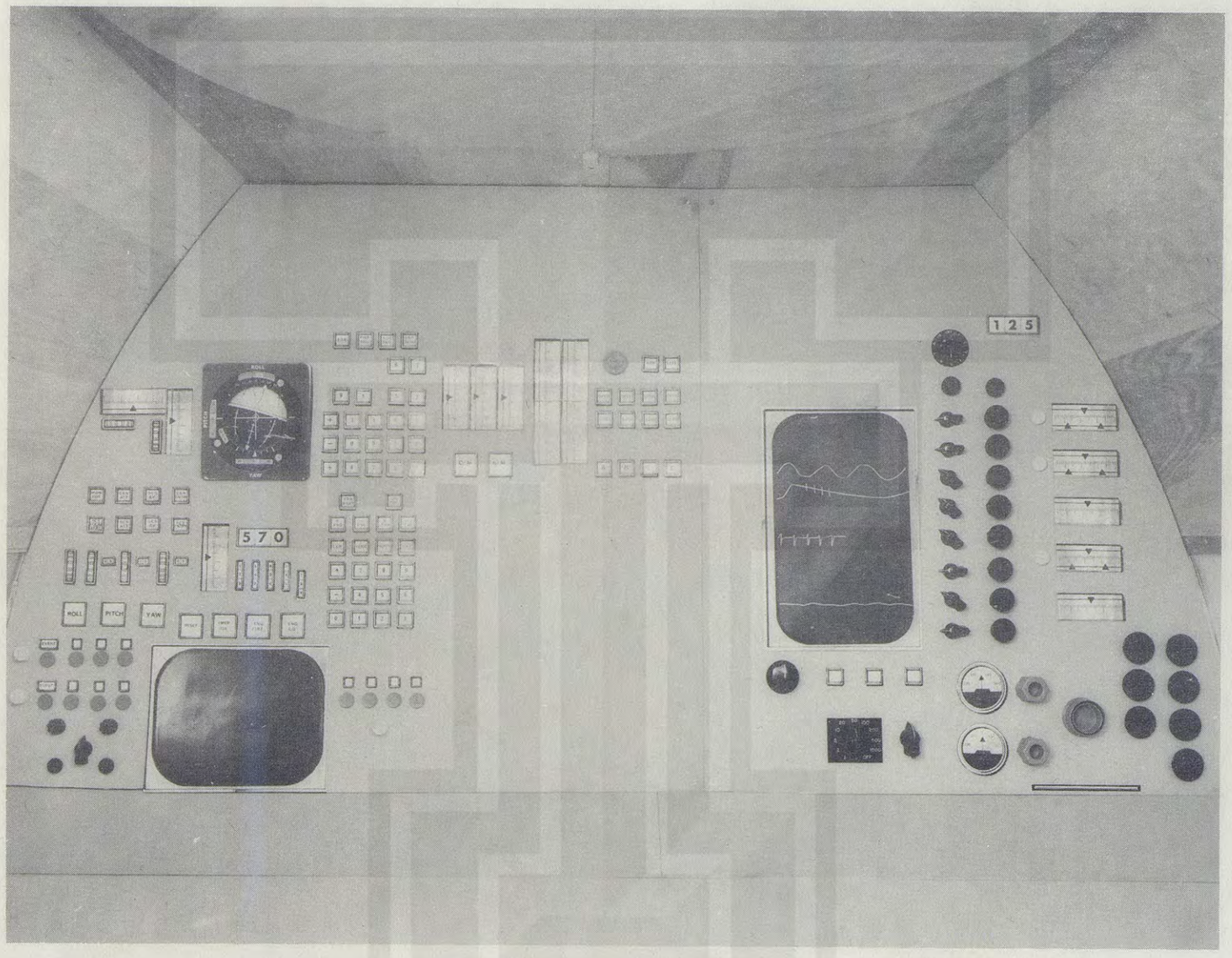

Fig. 4-5 Internal View of LEM Laboratory Mockup
(View Aft of Biometric Experiment Station)

The effect of an important variable in the initial time-line testing – the factor of training practice – became evident almost immediately. It was noted that immediate repetition of a test run resulted in a considerable reduction in the time required for the experimenter to perform the second run. This lesser time requirement held for both trained and untrained personnel and reflected the effect of "training" in the experiment procedure, and the related increase in experimenter proficiency, speed, and skill. Since most of the AAP biomedical/behavioral experiments may not be repeated – under the actual AAP flight schedule – more than once a day and, in most instances, only once a week, the shorter times achieved by immediate test repetition do not represent valid experiment time requirements. Consequently, the experiment schedule for the AAP study was rearranged so that each experiment was performed on only a once-a-week basis. This schedule produced performance times for experiment repetition that were more in line with the time required for the first test run of each experiment. It is believed, therefore, that the performance time requirements resulting under the revised schedule present a more realistic picture than those obtained with the previous schedule.

4.5.2 Selection and/or Construction of Equipment Required for Experiment Conduct

Equipment necessary to support the experiments was defined resulting in the realization that off-the-shelf equipment in most instances was not available. An immediate effort was therefore initiated to secure, modify, or develop mockup equipment required to support the various experiments. The availability of this equipment was the principal factor in scheduling time-line testing and feasibility analyses. Wherever possible, existing equipment was utilized to ensure the greatest degree of functional realism to the test program. Where mockup equipment was required, every effort was expended to construct a mockup with the maximum possible degree of realism, e.g., metal structure with controls (knobs, switches, etc.) and displays (dials, meters, etc.) cannibalized from obsolete equipment. Section 9 includes photographs of many equipment items for which mockups had to be constructed. In numerous instances, these mockups resemble very closely, the actual configurations and arrangement of the proposed conceptual equipment design.

4.5.3 Personnel Indoctrination and Training

Personnel involved in the time-line testing and feasibility analyses consisted of the time-line test and feasibility analyst, support and observer personnel, the subject and the experimenter. Each individual was carefully trained or indoctrinated in his particular program task.

The time-line test and feasibility analyst reviewed current methods and technology employed in industrial time-line analysis activities to ensure that methods employed in the study reflect the latest state-of-the-art in this particular field. In addition, each experiment procedure was reviewed several times by the experimenter to assure maximum familiarization with every experiment. Several trial runs were made before initiation of the actual program to provide an opportunity for the analyst to resolve any procedural problems noted in the set-up of the experiment testing program and to ensure that individual inconsistencies or human "quirks" were noted and measures taken to eliminate them from the analyst's technique.

Observer and support personnel were indoctrinated in their respective roles and informed in detail what was expected of them during the time-line tests and feasibility analyses. Similarly, the subjects and experiment personnel were given intensive, short term familiarization programs as applicable to their activities. Experiment personnel selected for the study were highly familiar with the methods, techniques, and equipment utilized in performing experiments generally similar in character to biomedical and behavioral experiments specified in the study. Further, they were provided with experiment procedures relative to their experiment area and required to review them in detail. Subject personnel were indoctrinated regarding specific aspects of the program, mockup, equipment, and experiment procedures.

4.5.4 Preparation of Mockup, Equipment, and Personnel for Time-Line Testing

A significant amount of preparation was required before initiating any of the time-line test and feasibility analyses. Equipment associated with the upcoming experiment was

stored in the mockup; cables were provided; illumination was checked, physiological safety monitoring equipment was set up and checked out; support personnel were contacted; experiment procedures were readied; and the area isolated to assure a minimum of external noise and activity.

4.6 METHODOLOGY OF TIME-LINE TESTING AND FEASIBILITY ANALYSES

4.6.1 General Considerations

Preliminary time-line testing and feasibility analyses were conducted during the study of the NASA-specified biomedical and behavioral experiments primarily to aid in providing data necessary for the establishment of experiment ordering and scheduling. This information is required to determine the feasibility, constraints, and limitations pertinent to the selection of a representative experiment program for AAP and the assignment of such experiments to the various flights within the AAP schedule. Since the determination of valid experiment times and feasibility therefore is an important step in the realization of the NASA objectives for the experiment program, performance of the analyses with the greatest degree of functional realism, accuracy, and objectivity was a paramount consideration in LMSC accomplishment of the program.

4.6.2 Time-Line Testing and Feasibility Analysis Methodology

Time-line testing for the AAP study has been conducted by one individual to assure minimum variation in testing techniques and methodology. A special data-recording form was prepared for this study and used by the analyst for each experiment test run. The analyst was thoroughly familiarized with each experiment and experiment procedures before conduct of the test. He personally set up each test sequence and arranged all the associated support requirements to assure the conduct of each test in an identical manner.

The form used for collection of time-line test and feasibility analysis data, designated as the Time-Line-Test Worksheet (TLT) and illustrated in Table 4-2, was developed to

Table 4-2

TIME-LINE TEST WORKSHEET (TLT)

Measurement/Experiment Identification		AES Station	Major Equipment	Support Equipment and Personnel
0202	Astronaut In-Flight Performance: Psychomotor; Continuous Processes (Pursuit Tracking)	Biometric Station	Human Performance Console	Computer 1 Crewman

Test Analyst:	R. B. Jones	Time of Run:	5 min and 43 sec
Subject:	R. B. Smith	Run No:	0202

Action		Action Feedback	Time	Frequency	Malfunction or Error	Remarks
Crew Man	Pursuit Tracking	CRT Image	7 Minutes (Estimated)	Continuous Task	Anticipated Procedural Error	
C	1. Seats himself and attaches restraint strap	Seated comfortably and secured properly	42 sec	Once	None	Restraint strap clumsy to use (suggest quick connect-disconnect type)
C	2. Removes instruction guide, selects pursuit tracking computer input program		37 sec	Once	None	None
C	3. Enters computer program via input keyboard	Keyboard computer check indicator lamp illuminates when correct input received and verified	53 sec	Twice	Crewman depressed a wrong input key: had to clear keyboard and repeat	Crewman nervous: his first task of the day
C	4. Turns on CRT and adjusts CRT brightness-contrast	Operating CRT; satisfactory brightness/contrast	20 sec	Once	None	None
C	5. Activates "joy" stick	Total movement of "joy" stick	9 sec	Once	None	None
C	6. Tracks CRT presentation with "joy" stick to check system	Tracking image on CRT checks with "joy" stick movement	35 sec	Once	None	None
C	7. Activates task timer (coupled to computer)	Timer indicator lamp illuminates and tracking task is initiated	8 sec	Once	None	None
C	8. Begins pursuit tracking task	Continuous tracking image on CRT	120 sec	Once	None	Overhead ambient illumination too bright (tendency to wash-out CRT presentation) Suggest-change plane angle of CRT window; mask CRT; relocate overhead lights; provide baffle for overhead lights (any, all, or combination of above should resolve problem)
C	9. Terminates task when timer signal sounds	CRT image changes to test pattern	1 sec	Once	None	None
C	10. Deactivates CRT	CRT image goes blank	2 sec	Once	None	None
C	11. Deactivates "joy" stick by placing in lock mode	"Joy" stick is inoperable	3 sec	Once	None	None
C	12. Deactivates timer	Timer switch is returned to zero status	3 sec	Once	None	None
C	13. Returns instruction guide to storage area	Human Performance Console is "shut down" and clear	10 sec	Once	None	None
		TOTAL	5 min and 43 sec			

accommodate information for the following data categories:

- Experiment identification
- AAP LEM Laboratory experiment station or area
- Major equipment and/or consumables
- Support equipment and personnel
- Action (Specific task performed by the subject)
- Action feedback (Result of subject action for particular task)
- Time (Required for experiment set-up and performance of step, to tear down or deactivate, and to stow)
- Frequency (Number of times subject performs step)
- Malfunction/Error (Equipment malfunction or human error)
- Remarks (Appropriate comments relative to the experiment steps, equipment, etc.)

The analyst was required to complete a TLT for each experiment. A coding system was devised since there is little time during an experiment run to record words on the data collection form. The experiment procedures were printed directly on this form to assure that the analyst could follow the sequence of steps in each experiment and note all required data. Table 4-2 illustrates data collected for a typical (hypothetical) experiment.

Each experiment and group of integrated experiments was performed three times. The experiments were conducted using three different personnel-trained, untrained, and untrained in a vented Gemini pressure suit. The three personnel were designated as experimenters since they conducted the experiment and, if required, used another individual as the subject. If, for example, the experiment required a physician to draw a blood sample from a fellow astronaut, the physician was designated as the experimenter and the astronaut from whom the blood sample was drawn was designated the subject. Hence, many of the biomedical experiments required both an experimenter and a subject. The subject was indoctrinated in the experiment and required to review

the experiment procedure(s). The trained experimenters were highly trained, from both the education and experience standpoint, in the particular field in which they acted as an experimenter. However, neither the untrained subject nor the untrained subject in a Gemini pressure suit were knowledgeable to any degree of sophistication in the experiment field in which they were used as an experimenter. This approach was taken to (1) determine the capability of untrained personnel for performing the experiments and the related feasibility of utilizing such personnel and (2) to discover if there was a significant difference between trained and untrained experimenters in the time required to perform the experiments.

The analyses were conducted in the LEM Laboratory mockup in accordance with the following procedure. The analyst selected the experiment, arranged for associated support personnel and equipment, determined that all required equipment was properly stowed or located in the mockup, and provided for the many miscellaneous but essential details attendant to proper test performance. The test was initiated upon instruction from the analyst to the experimenter (and subject, if required) to begin the selected experiment and was immediately terminated when the experimenter had completed the experiment. As this took place, the analyst recorded time and feasibility comments, and entered appropriate remarks on the data-recording form. Upon completion of the experiment, the analyst conducted a post-test interview with the experimenter (and subject, if involved) to record any comments from the experimenter regarding the following areas:

- experiment procedures
- equipment
- equipment location and use
- interference factors associated with surrounding equipment
- suggested experiment station design modifications
- peculiar problem areas
- general suggestions
- experiment feasibility

These comments were noted and entered into a general experiment log for future reference in discussing experiment results.

Data taken from the time-line test worksheets (TLT) was then analyzed and the experiment procedural step-times were summarized. After the experiment had been run three times and the total time values obtained for the three runs, an average or mean time required to conduct the experiment was calculated. Excessive times, frequency and type of errors, and operating difficulties were analyzed to determine (to the maximum extent possible) negative equipment characteristics, improper equipment interface or location, procedural inadequacies, etc. This analysis provided highly meaningful information for use in the scheduling and ordering of experiments, for identifying and defining equipment development requirements or modifications, and for indicating additional areas of investigation.

SYNOPSIS

This section presents the results of the time-line test and feasibility analysis performed during the study. Test scheduling, subject and experimenter training, and general pretest activities are also discussed. Typical problem areas identified during the study are presented. Times for each experiment, as determined during the testing program, are indicated for trained, untrained, and untrained pressure-suited personnel who, as experimenters, conducted each experiment a minimum of three times. These times are presented for individual and integrated experiments. In addition, the feasibility of each experiment or group of integrated experiments is discussed. Experiment results requiring further investigation as well as equipment-oriented recommendations are presented.

Section 5
TIME-LINE TEST AND FEASIBILITY ANALYSIS RESULTS

5.1 GENERAL CONSIDERATIONS

This study represents an initial and preliminary effort to obtain valid and meaningful time-line testing and feasibility data. The two primary objectives of the study were to determine the time required to conduct the NASA-specified biomedical and behavioral experiments, and to ascertain the feasibility of conducting these experiments within the LEM Laboratory. In order to attain these study objectives, it was necessary to accomplish the following tasks.

- Design and construct a mockup of the LEM Laboratory
- Develop space adapted experiment procedures
- Determine LEM Laboratory constraints and areas where limited modification can be accomplished within the Laboratory
- Design, fabricate, or construct mockups of nonavailable experiment equipment
- Conduct a preliminary time-line testing program for each experiment
- Perform a feasibility analysis for each experiment relative to the conduct of that experiment in the Laboratory mockup

This section discusses the results of the study program and the data obtained in the realization of the study objectives.

5.2 TIME-LINE TESTING

Each biomedical and behavioral experiment was conducted at least three time within the LEM Laboratory mockup, utilizing three different types of subject experimenters. Three categories of experimenter were used, as follows:

- Trained in the experiment area and intimately familiar with the experiment procedures

- Untrained in the experiment area but familiar with the experiment procedures
- Untrained in the experiment area but familiar with the experiments procedures, and wearing a vented Gemini pressure suit (gloves off and visor up)

The experimenter/subject conducted each experiment three times and a mean time was established for that set of time-line tests. Certain of the physiological experiments could not be conducted by the individual in the vented Gemini pressure suit because of the requirement for access to his body.

During every test, a time-line analyst recorded time, frequency, errors, and equipment malfunctions, and appropriate comments. The analyst conducted a post-test question period to delineate further problem areas noted, and to obtain the subject's comments relative to the experiment.

Experiment times were totaled for each procedure, and an overall experiment time specified. In many instances, certain non-subject participating times had to be added to the experiment procedure for mechanical/instrument operations, e.g., mixing of ingredients, centrifugation of chemicals, temperature control, chemical reaction, equipment warm-up, etc. The overall time required to conduct each experiment in this study is presented in Subsection 5.7.

5.3 FEASIBILITY ANALYSIS

Determination of the feasibility of conducting the experiment within the LEM Laboratory mockup was accomplished simultaneously with the time-line testing. During each time-line test, the time-line analyst evaluated the subject, equipment, and operating volume within the LEM Laboratory mockup to determine the feasibility aspect. The analysis was not oriented to the feasibility of the design of equipment, but rather to the feasibility of conducting that experiment utilizing the equipment provided, the experiment procedures specified, the area designated to conduct the experiment, and the necessary LEM Laboratory interface. The results of these analyses are presented in Subsection 5.7.

5.4 TEST SCHEDULING

Scheduling of the time-line testing of experiments proved to be of critical importance in the execution of the study program. Initially, the experiment schedules called for performance of the three test runs in immediate succession. The same subject thus could complete the experiment three times as a unit of effort and often on the same day. This kind of scheduling resulted, however, in an unforeseen development which greatly influenced the times recorded for the conduct of the tests. When, for example, the same experiment was conducted two or more times in succession, the time required to conduct the experiment was considerably less for Runs 2 and 3 than for Run 1. This factor did not reveal itself until after the first three days of time-line testing, at which point the pattern began to emerge.

Careful review of the time data indicated that the test program design had not considered the influence of test-run experience on accelerating the performance rate of the experimenter. The test team therefore reviewed the recommended schedule for conducting the experiments in-flight and found that the frequency varied from daily to weekly to every 10 days. The schedule for time-line testing therefore was immediately revised to reflect an overall recommended in-flight schedule. The revised schedule for time-line testing incorporated the concept of conducting the experiment only once every 5 days throughout the testing program. After several experiments had been conducted on this basis, times recorded for experiment conduct were back within the "expected" and actually very narrow time range.

5.5 EXPERIMENTER CAPABILITY AND TRAINING

Careful selection of experiment subjects and experimenters was necessary to assure results as representative as possible of the population selected for in-flight experimentation, e.g., astrophysicians and astronaut operational personnel. Trained personnel used as experimenters were selected on the basis of training, current occupational fields, and detailed knowledge of the experiment area. Personnel selected

as subjects were chosen on the basis of anthropometric similarities to the astronaut population. Untrained experimenters were selected on the basis of background approximating that of the astronaut population, e.g., engineering degrees, flight experience, familiarity with typical spacecraft ground simulations, and high levels of motivation.

In relation to the successful conduct of an experiment (i.e., performance in the exact manner prescribed, obtaining the required data or measurement precisely as specified, and attaining reliability and repeatibility of the measurement) a notable difference between the performance of trained and untrained experimenters was observed. The trained experimenter intuitively understood the experiment and readily comprehended what was expected of him. In addition, he was aware of and able to perform additional actions, not specified in the experiment procedure, that contributed meaningfully to the successful conduct of the experiment.

The result of the foregoing difference was primarily in terms of incremental or total time comparison but was indicated in subtle and less easily detected ways. For example, the untrained experimenter conducted the experiment according to the prescribed procedure, but he did not evidence the same careful and meticulous performance and operational understanding as did the trained experimenter. In addition, the untrained experimenter could not, in most instances, be depended upon to obtain the same data or measurement if the experiment was repeated under identical conditions immediately following an initial run. Although experiment conduct times were often similar for trained and untrained experimenters, there was a qualitative difference in performance.

The differences between the trained and untrained experimenter also became evident in the handling of equipment and subjects. The untrained experimenter was not as precise in equipment or sensor positioning nor was he as careful in handling somewhat delicate instrumentation. In general, the untrained experimenter, as compared to the trained experimenter, exhibited greater variations in technique, less intuitive understanding of the procedure, and less repeatability of measurement in the biochemical

and cytological experiments. Variations were also noted in the application of sensors to the body required in many of the physiological experiments.

It is believed that untrained experimenters will continue to exhibit the same degree of less desirable performance unless given detailed instruction in the experiment area with which they are involved. For example, to observe a culture dish containing bacterial growth and make a judgment that evidence of lack of growth calls for return of the dish to the temperature control area is generally beyond the capability of an untrained experimenter. Another example which highlights this problem is the application of physiological sensors. Even though the untrained experimenters were able to attach sensors, the lack of skill led to an inadequate sensor-to-body contact which generally invalidated the reliability and validity of the data obtained.

These problems associated with the use of untrained experimenters indicate the necessity for considering the data obtained as very preliminary in character and potentially misleading unless the circumstances of experiment conduct are thoroughly understood and considered. They do not imply an inadequacy in the time-line history and technique itself.

It is also important to realize that, despite some similarity in experiment conduct times achieved by both trained and untrained experimenters, care must be taken to avoid concluding that there is no need for training inexperienced personnel in areas in which they are to conduct experiments.

5.6 TYPICAL PROBLEM AREAS – TIME-LINE TESTING AND FEASIBILITY ANALYSIS

Several significant and enlightening problems were noted during the testing program. Many of the problems can be traced to individual differences between personnel, fatigue at the end of a normal work day, frustration at the close quarters in the mock-up, etc., which certainly influenced the test results.

The problem areas discussed in the following paragraphs are specifically related to "operational problems" relative to conduct of the experiment in the LEM Laboratory mockup. These problems can be generally categorized as follows:

- Improper equipment utilization
- Steps missed in the execution of experiment procedures
- Incorrect display/control interpretation or actuation
- Omitted experiment procedure step
- Conditions preventing procedure performance as specified
- Location of the equipment or instrument not optimum
- Lack of checkoff technique for procedural step after completion
- Complexity of integrated experiment procedures
- Difficulties in equipment handling and stowage under zero-g conditions (anticipated)
- Frequent and inadvertent body contact with equipment, compartments, and display/control panels

Related considerations are as follows:

- Improper Equipment Utilization. The most notable occurrence of this problem involved the improper utilization by untrained experimenters of instruments associated with biochemical and cytological experiments. Use of syringes, employment of blood-collecting and transfer techniques, and slide smear and staining equipment utilization were aspects of the biochemical/cytology experiments for which instrumentation was most often improperly utilized. Physiological sensors were occasionally positioned on the wrong body area or improperly attached by the untrained experimenter.
- Steps Missed in the Execution of Experiment Procedures. Almost all experimenters were guilty of this problem although the problem occurred less often in short and simple experiment procedures or those in which extreme concentration on the part of the experimenter was not required.
- Incorrect Display/Control Interpretation or Actuation. As expected, a certain degree of error performance was noted wherever experimenters (trained or untrained) were required to interface with displays and controls. Several

representative factors contributing to this situation were the location of panels in an incorrect plane of action, panels inadequately designed from the human-engineering standpoint, inadequate panel illumination, and panel labeling inconsistent with designations specified in the experiment procedure.

- Omitted Experiment Procedure Step. One or more steps were found to be omitted from early all experiment procedures. An interesting reaction to this situation was displayed by the trained experimenters. When a step was missing, the experimenter fabricated the action, just as though it has been specified in the procedure. The experimenter often did not evidence awareness of its omission. The untrained experimenters, on the other hand, readily identified such omissions, since they very often became confused, made related mistakes, and were unable to continue the experiment.
- Conditions Preventing Procedure Performance as Specified. Certain experiments were impossible to conduct because a given step required the experimenter to perform an act using non-existent equipment or required concurrent actions requiring the use of "three hands." This type of problem was aggravated in the case of the Experiment 0113 and the NPN blood procedures which were thus very difficult to complete. (All untrained experimenters failed to complete these procedures on the first test run).
- Location of Equipment or Instrument Not Optimum. The location of several equipments in their respective stowage areas often presented the experimenter with a problem in reaching and obtaining the equipment while in the confined LEM Laboratory cabin area and of locating it until it was set up in the proper operating position. This was particularly true of the LBNP Device, the motion chair, and the ergometer.
- Lack of Checkoff Technique for Procedural Step After Completion. Unless the experimenter actually used the test worksheet, he consistently lost track of steps accomplished and the next step to be taken. A method or technique of experiment procedure presentation and checkoff will be required to augment the experiment.

- Complexity of Integrated Experiment Procedures. A great deal can be said for the positive benefits associated with the integrated experiments (e.g., 0103, 0106, 0107, and 0108; 0104, 0109, and 0110; 0112, 0113, and 0117; and 0118, 0119, 0120, and 0121). However, the integration results in increasing the complexity of the total experiment procedure. This problem is of paramount concern in the 0112, 0113, and 0117, integrated experiment. The experimenter, for example, frequently may have to remember the status or whereabouts of numerous syringes, each in a different point in the experimentation. In addition, the necessity of switching from one experiment to another and from one substance to another in the biochemical area presents a very realistic problem considering the anticipated distractions that can occur on any given day during an in-flight operation.
- Difficulties in Equipment Handling and Stowage Under Zero-G Conditions. One of the most common problems associated with equipment handling was the inadvertent loss of control of a device. Under 1 g, a mishandled device drops to the floor or into a lap, etc. Under zero-g conditions, however, the device will float about the cabin unless provision is made for its physical attachment, when not in use, to some form of anchorage. This problem also occurs with respect to stowage of such equipment in order to assure that the equipment will retain the same position and orientation in stowage as that in which it is placed by the experimenter.
- Frequent and Inadverent Body Contact With Equipment Compartments and Display Control Panels. In view of the unusual configuration of the LEM Laboratory and the limited free volume thus available the experimenters were constantly and inadvertently coming into body contact with the various equipment, compartments, and panels. This can be of significance if the experimenter contact with equipment or controls resulted in some way in degradation of the experiment.

Considerable progress in solving the foregoing problems can be achieved by refining the experiment procedures. Once this task has been accomplished, a highly significant number of the problems will disappear or be reduced to tolerable levels. Further, as

equipment required to conduct experiments moves toward a final design shape and size, provision can be made to solve many of the utilization and stowage problems. The process of mockup testing through functional testing can thus be highly effective in eliminating the problem-creating features from the design before they can cause operational problems requiring extensive changes, modifications, or revisions to the biomedical experiment package.

5.7 TIME-LINE TESTING AND FEASIBILITY ANALYSIS RESULTS

Table 5-1 presents a comparison of the experiment time estimates made by NAA and LMSC, versus actual LMSC time-line testing study results relative to the time required to conduct the biomedical and behavioral experiments in the 0100 and 0200 experiment series. Experiment 0116 was deleted from the study by the NASA contract monitor, and no time estimates by NAA were available for the 0200 series behavioral experiments.

Time estimates for experiments 0112, 0113, and 0117 were not included in the table as the NAA time estimates generally cover only the acquisition of body fluid or solid and include little or no time for on-board analysis. Comparison of this NAA data with the LMSC time estimates would not be realistic since these experiments were, for the most parts, analyzed on-board and include somewhat lengthy processing activities (as compared to sample collection).

Preliminary results of the time-line testing and feasibility analysis for each experiment are presented in the following summaries. Integrated experiments are also discussed in order to provide comparative data.

5.7.1 Individual Experiments

Experiment 0101 – Assessment of Changes in Sensitivity of the Otolith Mechanism and its Central Nervous System (CNS) Connections to Linear Accelerations as a Result of Prolonged Weightlessness. This experiment was conducted in the main cabin area of the LEM Laboratory mockup with the experimenter located in the midsection area. There was no highly trained experimenter available for this experiment; therefore,

Table 5-1

COMPARISON OF ESTIMATED VS. ACTUAL TIME-LINE TEST RESULTS

Experiment	NAA Estimated Time (min)	LMSC Estimated Time (min)	LMSC Time-Line Result* (min)
0101	50	58	46
0102	90	57	42
0103	50–90	49	20
0104	85–125	69	33
0105	110–160	132	34
0106	35	66	19
0107	40	66	26
0108	42	52	42
0109	57	36	11
0110	30	44	14
0111	25	162	130
0112	30	Not Appropriate**	Not Appropriate**
0113	390	Not Appropriate**	Not Appropriate**
0114	20	30	25
0115	195	40	28
0116	Deleted by NASA Direction		
0117	25	Not Appropriate**	Not Appropriate**
0118	45	132	81
0119	105	36	123
0120	135	62	58
0121	85	70	25
0201	Unstated	41	27
0202	Unstated	73	48
0203	Unstated	20	11

*Values represent mean times for the trained experimenter.
**Experiment conducted on-board and includes 8- and 24-hr wait periods.

the study leader of the program contacted one of the principal investigators (NASA-specified) for this experiment to learn and determine as much as possible about the parameters to be monitored and the techniques and equipment utilized in conducting the experiment. Dr. Earl F. Miller, II, U.S. Naval Aerospace Medical Institute was the contact suggested by the NASA contract monitor as the individual who could provide the information required to conduct the time line testing and feasibility analysis of this experiment. Dr. Miller provided LMSC with detailed experiment descriptions, initial flight-oriented experiment procedures, a conceptual engineering drawing of the principal experiment apparatus (Graybiel/Miller Litter Chair), and a detailed listing of the support equipment. This information was utilized as the basis of the time-line test feasibility analysis for the experiment. Preliminary time results for conducting this experiment are included in the discussion for Experiment 0102.

Based on the data provided by Dr. Miller, and the translation of that data into the study program requirements, the experiment generally appears feasible for nonpressure-suited subject experimentation. The most critical feature is the requirement for unrestricted volume in which to conduct the experiment. On the basis of the information available, it appears that there may be an area in the LEM Laboratory main cabin which could accommodate an experiment apparatus 40-in. in diameter by 70 to 80 in. in height. The required operating volume for the Graybiel/Miller Litter Chair (renamed the motion chair by LMSC)* is, for example, a 40-in. cylinder 70 in. in height. It is suggested, that this chair, through careful design, can be packaged into an operating volume (including the subject) which can be accommodated in the main cabin area.

Experiment 0102—Effects of Rotation of the Head in Weightlessness and of a Rotating Vehicle on Semicircular Canal Functions. Comments provided for Experiment 0101 are applicable to this experiment. It should be noted that is is not necessary to rotate the LEM Laboratory to provide the rotating stimulus to the subject since the capability has been designed into the experiment chair apparatus.

---

*The Graybiel/Miller Litter Chair was renamed the motion chair as LMSC is presently preparing a minimal redesign of the chair in order to provide a unit which can also perform mass determinations utilizing the same basic design.

Preliminary time-line test results for Experiments 0101 and 0102 are presented in the following tabulation:

Experimenter	Experiment Times for 0101 (Min:Sec) Low	Mean	High
Trained	43:36	45:46	46.36
Untrained	44:48	45:45	47.44
Untrained, in vented pressure suit	Not Feasible		

Experimenter	Experiment Times for 0102 (Min:Sec) Low	Mean	High
Trained	40:01	42:06	43:08
Untrained	41:12	42:35	43:16
Untrained, in vented pressure suit	Not Feasible		

Experiment 0103—Response of Human Circulatory Dynamics to Provocative Testing During Prolonged Spaceflight. This experiment was conducted in the main cabin area of the LEM Laboratory mockup with the experimenter located in the midsection area (biometric station). Since this experiment utilized prototype equipment requiring the subject to submit to a lower body negative pressure (LBNP) (which, if improperly conducted, could exceed medical safety limits), actual bioinstrumentation was used to monitor the safety and status of the subject and to provide considerable more functional realism to the time-line test. During this test, systolic and diastolic blood pressure and heart rate were presented on equipment displays and recorders for actual monitoring by a physician. Preliminary time-line test results for this experiment are tabulated as follows:

Experimenter	Experiment Times for 0103 (Min:Sec) Low	Mean	High
Trained	19:21	20:15	20:35
Untrained	20:35	25:03	27:17
Untrained, in vented pressure suit	Not Feasible		

This experiment appears feasible, utilizing the equipment currently specified for parameter monitoring and subject use. Minor difficulties were noted during the stowage and set-up of the instrumentation belt because the many leads occasionally became entangled. In addition, two personnel are required to position the device. Originally, only one individual was designated as required for this purpose.

Experiment 0104 – Exercise (Work) Capacity and Circulatory Responses to Exercise During Prolonged Spaceflight. This experiment was conducted in the main cabin area of the LEM Laboratory mockup with the experimenter located in the midsection area (biometric station). The experiment utilized prototype equipment requiring the subject to exercise at a level which, if exceeded, could approach medical safety limits. Actual bioinstrumentation, therefore, was used to monitor the safety and status of the subject and to provide considerably more functional realism to the time-line test. During the test, systolic and diastolic blood pressure and heart rate were presented on equipment displays and recorders for actual monitoring by a physician. Preliminary time-line test results for this experiment are presented in the following tabulation.

Experiment Times for 0104
(Min:Sec)

Experimenter	Low	Mean	High
Trained	29:27	33:13	35:06
Untrained	34:52	35:36	35:58
Untrained, in vented pressure suit		Not Feasible	

The experiment appears feasible, utilizing the equipment currently specified for parameter monitoring and subject use. Minor difficulties were noted in the stowage and set-up of the instrumentation harness because of the many leads occasionally becoming entangled. A greater length of time was required to set up the total experiment apparatus than originally estimated; however, the increase in time did not affect the total over-all time estimate. Extreme care must be used in conducting this experiment to assure that the subject does not exceed the predetermined heart rate during the exercise mode. To prevent the occurrence of such a problem, it is

recommended that the subject be fully instrumented and that a physician be in constant attend nce during the exercise mode.

Experiment 0105 – Changes in Blood Volume and Other Body-Fluid Compartment Volumes. Conduct of this experiment was performed in the midsection area of the LEM Laboratory mockup. The experiment is logically composed of two distinct elements – total body water and plasma volume. The initial procedure, concerned with the determination of total body water, requires several steps before the determination can be made 6 hr later. Hence, there is a significant time lag in this element of the experiment during which other experimental activities can be conducted.

The second major determination, plasma volume, requires a 15-min waiting period in the middle of the experiment; thus, if the experiment is properly scheduled, much of this time can be salvaged by having the physician analyze and evaluate data obtained from the total body-water determination. Preliminary time-line test results for this experiment have been tabulated as follows:

Experiment Times for 0105
(Min:Sec)

Experimenter	Low	Mean	High
Trained	31:15	33:44	34:58
Untrained	35:29	36:28	36:58
Untrained, in vented pressure suit*		Not Feasible	

*Plasma volume determination only.

The experiment appears feasible, utilizing the equipment currently specified for determination of both total body water and plasma volume. A Gemini pressure-suited subject can perform the total body water experiment; however, it is impractical to conduct the plasma volume procedure since venipunctures are required.

Experiment 0106 – The Effect of Prolonged Spaceflight on Carotid Baroreceptor Reflexes and Arteriolar Reactivity. This experiment was conducted in the main cabin area of the LEM Laboratory mockup with the experimenter located in the midsection

area (biometric station). The primary time involved in this experiment is associated with the set-up of equipment and the instrumentation of the subject. Actual experimentation time is minimal. Preliminary time-line test results for this experiment are as follows:

	Experiment Times for 0106 (Min:Sec)		
Experimenter	Low	Mean	High
Trained	18:36	18:53	19:02
Untrained	14:27	19:36	22:11
Untrained, in vented pressure suit		Not Feasible	

The experiment appears feasible, utilizing the equipment currently specified for monitoring the desired parameters. Minor difficulties were noted in the stowage and set-up of the instrumentation harness because the many leads occasionally became entangled. Extreme caution must be exercised in this experiment when using the neck-cuff because of the potential hazards to the subject. A physician therefore was always in attendence during the actual conduct of the experiment to monitor the subject and assure adherence by the experimenter to all safety practices established for experimentation of this nature. It was quite obvious that this experiment could be combined with other cardiovascular experiments because of the similarity of monitoring parameters, procedures, and commonality of equipment and instrumentation.

Experiment 0107 – Alterations in Venous Compliance Resulting from Absence of Hydrostatic Pressure. This experiment was conducted in the main cabin area of the LEM Laboratory mockup with the experimenter located in the midsection area (biometric station). Since the experiment utilized prototype equipment that required the subject to submit to a lower body negative pressure test (which, if improperly conducted, could exceed medical safety limits), actual bioinstrumentation was used to monitor the safety and status of the subject, and to provide considerably more functional realism to the time-line test. During the test, systolic and diastolic blood

pressure and heart rate were presented on equipment displays and recorders for actual monitoring by a physician. Preliminary time-line test results were as follows:

	Experiment Times for 0107 (Min:Sec)		
Experimenter	Low	Mean	High
Trained	24:43	25:22	25:42
Untrained	28:21	30:06	30:58
Untrained, in vented pressure suit		Not Feasible	

This experiment appears feasible, utilizing the equipment currently specified for parameter monitoring and subject use. Minor difficulties were noted during the set-up and stowage of the instrumentation belt and harness because of the many leads becoming entangled. Originally only one individual was designated to set up the LB NP device; however, two personnel are required, due to the awkwardness of assembly, confined quarters, and state of weightlessness. This experiment and the other cardiovascular experiments should be combined because of the similarity of monitoring parameters and procedures and the commonality of equipment and instrumentation.

Experiment 0108 – Evaluation of Countermeasures to Prevent Circulatory Reflex Changes Occasioned by Prolonged Exposure to Null Gravity. This experiment was conducted in the main cabin area of the LEM Laboratory mockup with the experimenter located in the midsection area (biometric station). The experiment utilized a variety of prototype equipment that required the subject to submit to or perform several tests or exercises. Since many of these could result in medical limits being exceeded, actual bioinstrumentation was used for monitoring (by a physician) the safety and status of the subject, and to provide considerably more functional realism to the time-line test. During the test, systolic and diastolic blood pressure and heart rate were presented on equipment displays and recorders for actual monitoring by a physician. The experiment times in the following tabulation reflect values based upon the use of the most time-consuming type of countermeasure device. Use of any other types of device can therefore be expected to result in variation only in the direction of less time.